ERICSSON

Technical Specification

PKM 4000C PINB Series DC/DC converters, Input 36-75 V, Output 100 A/180 W	EN/LZT 146 397 R2A March 2009 © Ericsson AB

Key Features

- Industry standard quarter-brick and optional double Pin-Out. 57.9 x 36.8 x 9.35 mm (2.28 x 1.45 x 0.368 in.)
- High efficiency, typ. 91.5 % at 1.8 Vout half load
- 2250 Vdc input to output isolation
- Meets isolation requirements equivalent to basic insulation according to IEC/EN/UL 60950
- More than 2.7 million hours MTBF

General Characteristics

- Over temperature protection
- Over current limit protection
- Over voltage protection
- Remote control
- Output voltage adjust function
- Highly automated manufacturing ensures quality
- ISO 9001/14001 certified supplier

Safety Approvals

c UL us

Design for Environment

Pb RoHS compatible

Meets requirements in high-temperature lead-free soldering processes.

Contents

General Information 2
Safety Specification 3
Absolute Maximum Ratings 4

Product Program	Ordering No.	
1.2V, 100A / 120W Electrical Specification	PKM4118LC PINB	5
1.5V, 100A / 150W Electrical Specification	PKM4218HC PINB	9
1.8V, 100A / 180W Electrical Specification	PKM4218GC PINB	13

EMC Specification 17
Operating Information 18
Thermal Consideration 19
Connections 21
Mechanical Information 22
Soldering Information 24
Delivery Information 24
Product Qualification Specification 25

© Ericsson AB

General Information

Ordering Information

See Contents for individual product ordering numbers.

Option	Suffix	Ordering No.
Baseplate		PKM 4118LC PI
Positive Remote Control Logic	P	PKM 4118LC PIPNB
Increased stand-off height	M	PKM 4118LC PINBM
Lead length 3.69 mm (0.145 in)	LA	PKM 4118LC PINBLA
Lead length 4.57 mm (0.180 in)	LB	PKM 4118LC PINBLB

Note: As an example a positive logic, increased standoff, short pin product would be PKM 4118LC PIPNBMLA.

Reliability

The Mean Time Between Failure (MTBF) is calculated at full output power and an operating ambient temperature (T_A) of +40°C, which is a typical condition in Information and Communication Technology (ICT) equipment. Different methods could be used to calculate the predicted MTBF and failure rate which may give different results. Ericsson Power Modules currently uses two different methods, Ericsson failure rate data system DependTool and Telcordia SR332.

Predicted MTBF for the series is:
- 2.7 million hours according to DependTool.
- 1.4 million hours according to Telcordia SR332, issue 1, Black box technique.

The Ericsson failure rate data system is based on field tracking data. The data corresponds to actual failure rates of components used in ICT equipment in temperature controlled environments (T_A = -5...+65°C).
Telcordia SR332 is a commonly used standard method intended for reliability calculations in ICT equipment. The parts count procedure used in this method was originally modelled on the methods from MIL-HDBK-217F, Reliability Predictions of Electronic Equipment. It assumes that no reliability data is available on the actual units and devices for which the predictions are to be made, i.e. all predictions are based on generic reliability parameters.

Compatibility with RoHS requirements

The products are compatible with the relevant clauses and requirements of the RoHS directive 2002/95/EC and have a maximum concentration value of 0.1% by weight in homogeneous materials for lead, mercury, hexavalent chromium, PBB and PBDE and of 0.01% by weight in homogeneous materials for cadmium.

Exemptions in the RoHS directive utilized in Ericsson Power Modules products include:
- Lead in high melting temperature type solder (used to solder the die in semiconductor packages)
- Lead in glass of electronics components and in electronic ceramic parts (e.g. fill material in chip resistors)
- Lead as an alloying element in copper alloy containing up to 4% lead by weight (used in connection pins made of Brass)

Quality Statement

The products are designed and manufactured in an industrial environment where quality systems and methods like ISO 9000, 6σ (sigma), and SPC are intensively in use to boost the continuous improvements strategy. Infant mortality or early failures in the products are screened out and they are subjected to an ATE-based final test. Conservative design rules, design reviews and product qualifications, plus the high competence of an engaged work force, contribute to the high quality of our products.

Warranty

Warranty period and conditions are defined in Ericsson Power Modules General Terms and Conditions of Sale.

Limitation of Liability

Ericsson power Modules does not make any other warranties, expressed or implied including any warranty of merchantability or fitness for a particular purpose (including, but not limited to, use in life support applications, where malfunctions of product can cause injury to a person's health or life).

© Ericsson AB

Safety Specification

General information

Ericsson Power Modules DC/DC converters and DC/DC regulators are designed in accordance with safety standards IEC/EN/UL60950, *Safety of Information Technology Equipment*.

IEC/EN/UL60950 contains requirements to prevent injury or damage due to the following hazards:

- Electrical shock
- Energy hazards
- Fire
- Mechanical and heat hazards
- Radiation hazards
- Chemical hazards

On-board DC-DC converters are defined as component power supplies. As components they cannot fully comply with the provisions of any Safety requirements without "Conditions of Acceptability". It is the responsibility of the installer to ensure that the final product housing these components complies with the requirements of all applicable Safety standards and Directives for the final product.

Component power supplies for general use should comply with the requirements in IEC60950, EN60950 and UL60950 *"Safety of information technology equipment".*

There are other more product related standards, e.g. IEEE802.3af "Ethernet LAN/MAN Data terminal equipment power", and ETS300132-2 "Power supply interface at the input to telecommunications equipment; part 2: DC", but all of these standards are based on IEC/EN/UL60950 with regards to safety.

Ericsson Power Modules DC/DC converters and DC/DC regulators are UL60950 recognized and certified in accordance with EN60950.

The flammability rating for all construction parts of the products meets requirements for V-0 class material according to IEC 60695-11-10.

The products should be installed in the end-use equipment, in accordance with the requirements of the ultimate application. Normally the output of the DC/DC converter is considered as SELV (Safety Extra Low Voltage) and the input source must be isolated by minimum Double or Reinforced Insulation from the primary circuit (AC mains) in accordance with IEC/EN/UL60950.

Isolated DC/DC converters

It is recommended that a slow blow fuse with a rating twice the maximum input current per selected product be used at the input of each DC/DC converter. If an input filter is used in the circuit the fuse should be placed in front of the input filter.
In the rare event of a component problem in the input filter or in the DC/DC converter that imposes a short circuit on the input source, this fuse will provide the following functions:

- Isolate the faulty DC/DC converter from the input power source so as not to affect the operation of other parts of the system.
- Protect the distribution wiring from excessive current and power loss thus preventing hazardous overheating.

The galvanic isolation is verified in an electric strength test. The test voltage (V_{iso}) between input and output is 1500 Vdc or 2250 Vdc for 60 seconds (refer to product specification).
Leakage current is less than 1 µA at nominal input voltage.

24 V DC systems

The input voltage to the DC/DC converter is SELV (Safety Extra Low Voltage) and the output remains SELV under normal and abnormal operating conditions.

48 and 60 V DC systems

If the input voltage to Ericsson Power Modules DC/DC converter is 75 Vdc or less, then the output remains SELV (Safety Extra Low Voltage) under normal and abnormal operating conditions.

Single fault testing in the input power supply circuit should be performed with the DC/DC converter connected to demonstrate that the input voltage does not exceed 75 Vdc.

If the input power source circuit is a DC power system, the source may be treated as a TNV2 circuit and testing has demonstrated compliance with SELV limits and isolation requirements equivalent to Basic Insulation in accordance with IEC/EN/UL60950.

Non-isolated DC/DC regulators

The input voltage to the DC/DC regulator is SELV (Safety Extra Low Voltage) and the output remains SELV under normal and abnormal operating conditions.

© Ericsson AB

Absolute Maximum Ratings

Characteristics			min	typ	max	Unit
T_{P1}	Operating Temperature (see Thermal Consideration section)		-40		+125	°C
T_S	Storage temperature		-55		+125	°C
V_I	Input voltage		-0.5		+80	V
V_{iso}	Isolation voltage (input to output test voltage)				2250	Vdc
V_{tr}	Input voltage transient (t_p 100 ms)				100	V
V_{RC}	Remote Control pin voltage (see Operating Information section)	Positive logic option	-0.5		15	V
		Negative logic option	-0.5		15	V
V_{adj}	Adjust pin voltage (see Operating Information section)		-0.5		2.4	V

Stress in excess of Absolute Maximum Ratings may cause permanent damage. Absolute Maximum Ratings, sometimes referred to as no destruction limits, are normally tested with one parameter at a time exceeding the limits of Output data or Electrical Characteristics. If exposed to stress above these limits, function and performance may degrade in an unspecified manner.

Fundamental Circuit Diagram

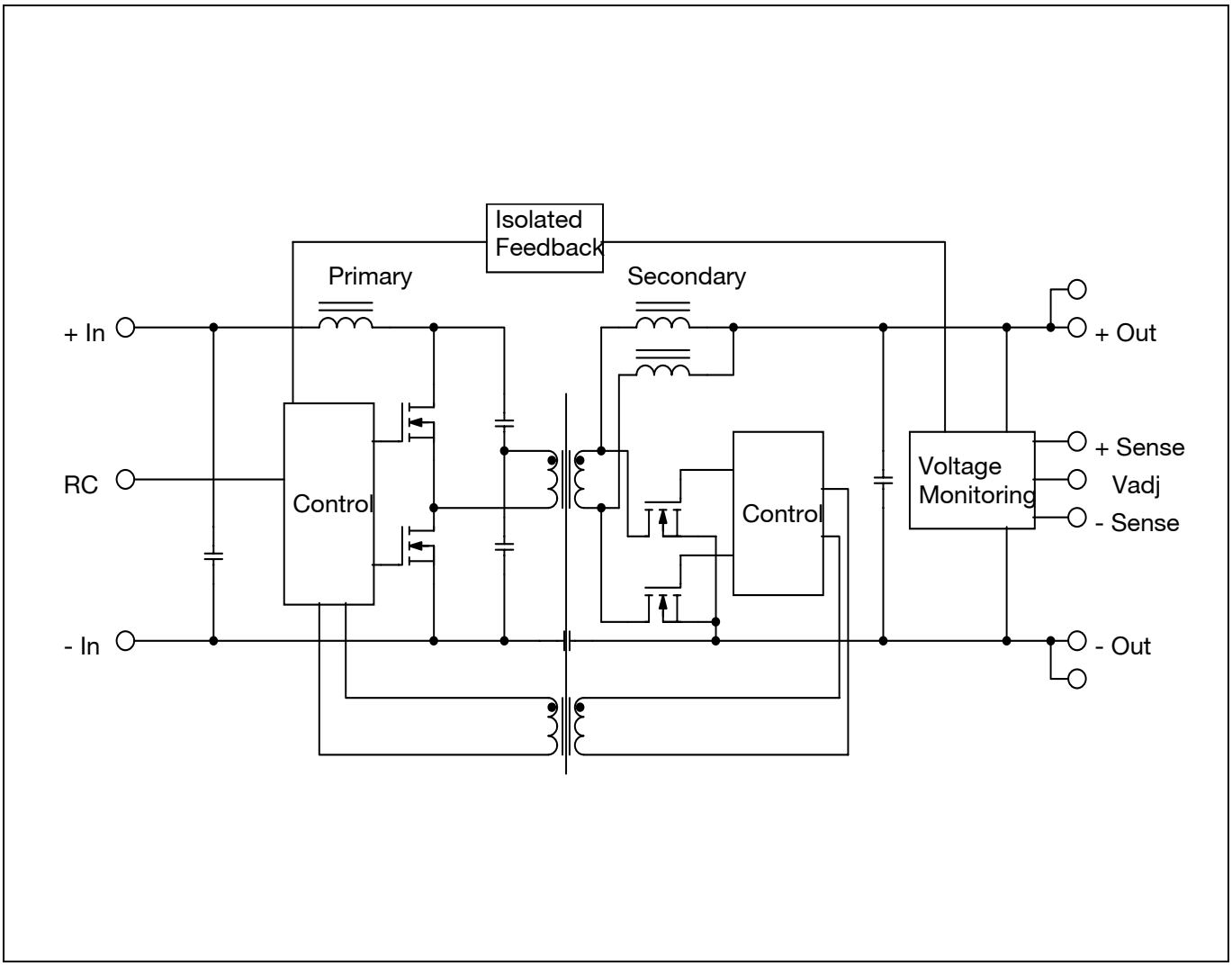

© Ericsson AB

1.2V, 100A /120W Electrical Specification

PKM4118LC PINB

T_{P1} = -40 to +90ºC, V_I = 36 to 75 V, sense pins connected to output pins unless otherwise specified under Conditions.
Typical values given at: T_{P1} = +25°C, V_I= 53 V_I max I_O, unless otherwise specified under Conditions.

Characteristics		Conditions	min	typ	max	Unit
V_I	Input voltage range		36		75	V
V_{Ioff}	Turn-off input voltage	Decreasing input voltage	30	31	32	V
V_{Ion}	Turn-on input voltage	Increasing input voltage	33	34	35	V
C_I	Internal input capacitance			6		µF
P_O	Output power		0		120	W
η	Efficiency	50 % of max I_O		90.0		%
		max I_O		85.5		
		50 % of max I_O, V_I = 48 V		90.0		
		max I_O, V_I = 48 V		85.5		
P_d	Power Dissipation	max I_O		21	26	W
P_{li}	Input idling power	I_O = 0 A, V_I = 53 V		2.0		W
P_{RC}	Input standby power	V_I = 53 V (turned off with RC)		0.11		W
f_s	Switching frequency	0-100 % of max I_O see Note 1	140	155	170	kHz

V_{Oi}	Output voltage initial setting and accuracy	T_{P1} = +25°C, V_I = 53 V, I_O = 100 A	1.18	1.20	1.22	V
V_O	Output adjust range	See operating information	1.08		1.32	V
	Output voltage tolerance band	10-100 % of max I_O	1.16		1.24	V
	Idling voltage	I_O = 0 A	1.18		1.22	V
	Line regulation	max I_O		5	10	mV
	Load regulation	V_I = 53 V, 0-100 % of max I_O		5	10	mV
V_{tr}	Load transient voltage deviation	V_I = 53 V, Load step 25-75-25 % of max I_O, di/dt = 1 A/µs see Note 1		±200	±250	mV
t_{tr}	Load transient recovery time			120	200	µs
t_r	Ramp-up time (from 10−90 % of V_{Oi})	10-100 % of max I_O	2	4	7	ms
t_s	Start-up time (from V_I connection to 90 % of V_{Oi})		4	7	9	ms
t_f	V_I shut-down fall time (from V_I off to 10 % of V_O)	max I_O		0.05		ms
		I_O = 0 A		35		s
t_{RC}	RC start-up time	max I_O		7		ms
	RC shut-down fall time (from RC off to 10 % of V_O)	max I_O		0.05		ms
		I_O = 0 A		35		s
I_O	Output current		0		100	A
I_{lim}	Current limit threshold	T_{P1} < max T_{P1}	105	125	140	A
I_{sc}	Short circuit current	T_{P1} = 25ºC, see Note 2		130	160	A
C_{out}	Recommended Capacitive Load	T_{P1} = 25ºC, see Note 3	0		10000	µF
V_{Oac}	Output ripple & noise	See ripple & noise section, max I_O, V_{Oi}		120	240	mVp-p
OVP	Over voltage protection	T_{P1} = +25°C, V_I = 53 V, 0-100 % of max I_O	1.4	1.5	1.7	V

Note 1: C_{out} used at load transient test: 100 uF/A and ESR<5 mohm
Note 2: See Operating Information section
Note 3: C_{out} :ESR-value <5mohm

1.2V, 100A /120W Typical Characteristics

PKM4118LC PINB

Efficiency

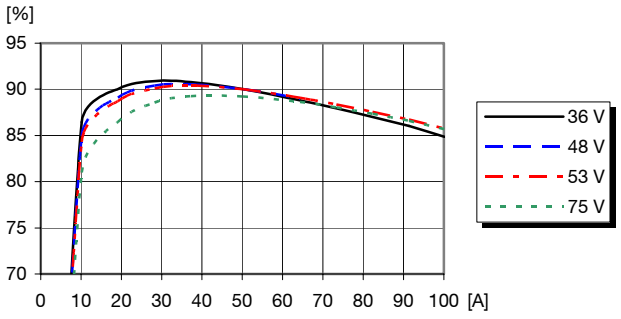

Efficiency vs. load current and input voltage at T_{P1} = +25°C

Power Dissipation

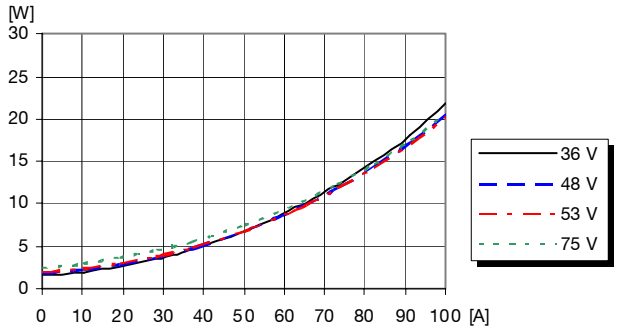

Dissipated power vs. load current and input voltage at T_{P1} = +25°C

Output Characteristics

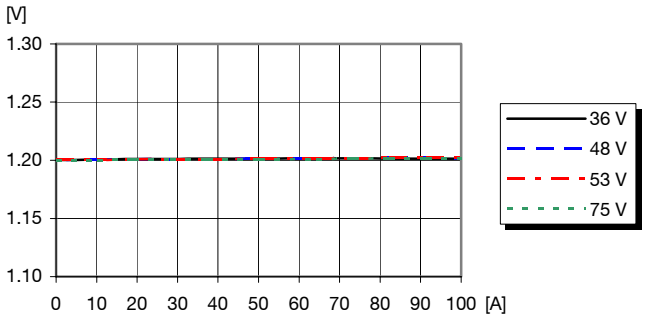

Output voltage vs. load current at T_{P1} = +25°C

Current Limit Characteristics

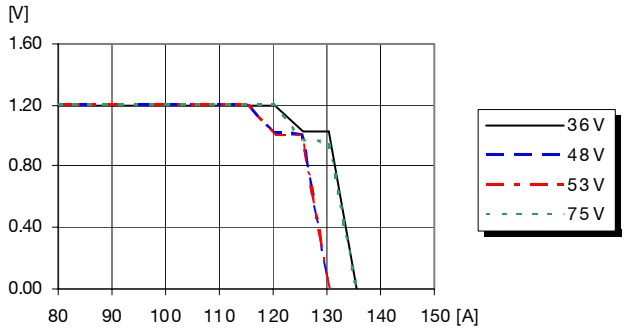

Output voltage vs. load current at I_O > max I_O , T_{P1} = +25°C

1.2V, 100A /120W Typical Characteristics

PKM4118LC PINB

Start-up

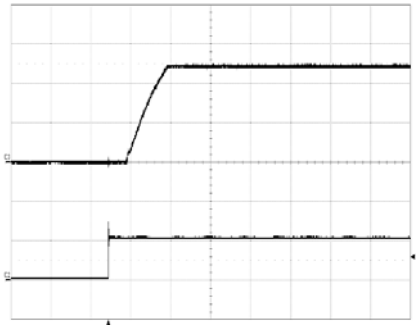

Start-up enabled by connecting V_I at:
T_{P1} = +25°C, V_I = 53 V,
I_O = 100 A resistive load.

Top trace: output voltage (500 mV/div.).
Bottom trace: input voltage (50 V/div.).
Time scale: (5 ms/div.).

Shut-down

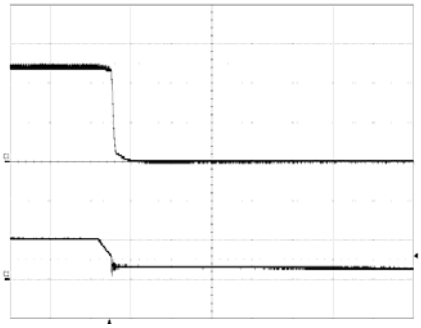

Shut-down enabled by disconnecting V_I at:
T_{P1} = +25°C, V_I = 53 V,
I_O = 100 A resistive load.

Top trace: output voltage (500mV/div.).
Bottom trace: input voltage (50 V/div.).
Time scale: (0.2 ms/div.).

Output Ripple & Noise

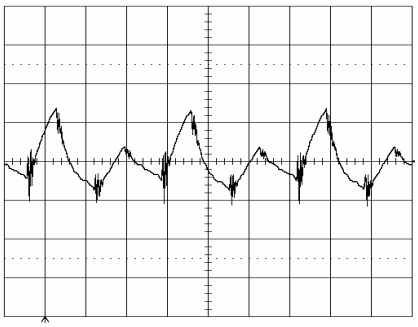

Output voltage ripple at:
T_{P1} = +25°C, V_I = 53 V,
I_O = 100 A resistive load.

Trace: output voltage (50 mV/div.).
Time scale: (2 µs/div.).

Output Load Transient Response

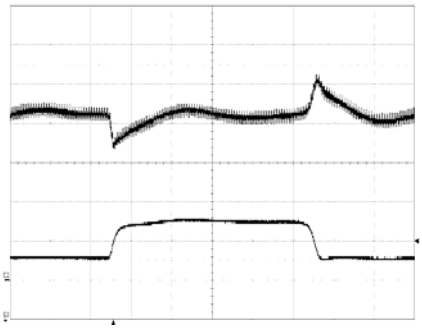

Output voltage response to load current step-change (25-75-25 A}) at:
T_{P1} =+25°C, V_I = 53 V.

Top trace: output voltage (200 mV/div.}).
Bottom trace: load current (50 A/div.).
Time scale: (0.1 ms/div.).

Output Voltage Adjust (see operating information)

Passive adjust
The resistor value for an adjusted output voltage is calculated by using the following equations:

Output Voltage Adjust Upwards, Increase:

$$Radj = 5.11\left(\frac{Vo(100+\Delta\%)}{0.6125\times\Delta\%} - \frac{100+2\times\Delta\%}{\Delta\%}\right)\text{k}\Omega$$

Example: Increase 4% =>V_{out} = 1.248 Vdc

$$Radj = 5.11\left(\frac{1.2\times(100+4)}{0.6125\times 4} - \frac{100+2\times 4}{4}\right)\text{k}\Omega = 122\ \text{k}\Omega$$

Output Voltage Adjust downwards, Decrease:

$$Radj = 5.11\left(\frac{100}{\Delta\%} - 2\right)\text{k}\Omega$$

Example: Decrease 4% =>V_{out} = 1.152Vdc

$$Radj = 5.11\left(\frac{100}{4} - 2\right)\text{k}\Omega = 117\text{k}\Omega$$

1.2V, 100A /120W Typical Characteristics

PKM4118LC PINB

Output Current Derating – Open frame

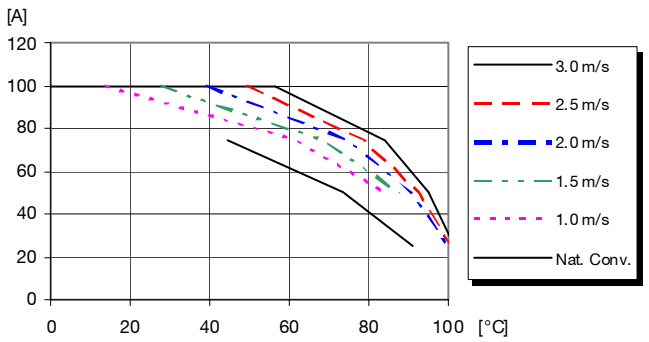

Available load current vs. ambient air temperature and airflow at V_I = 53 V. See Thermal Consideration section.

Output Current Derating – Base plate

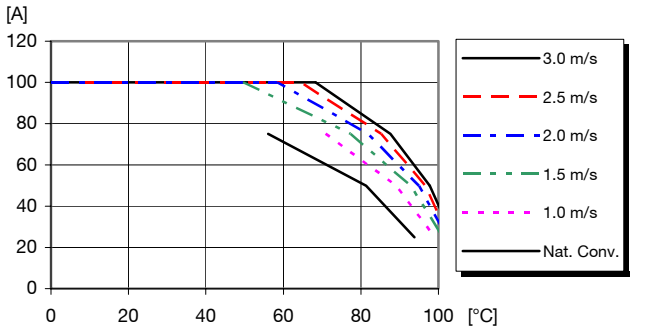

Available load current vs. ambient air temperature and airflow at V_I = 53 V. See Thermal Consideration section.

Thermal Resistance – Base plate

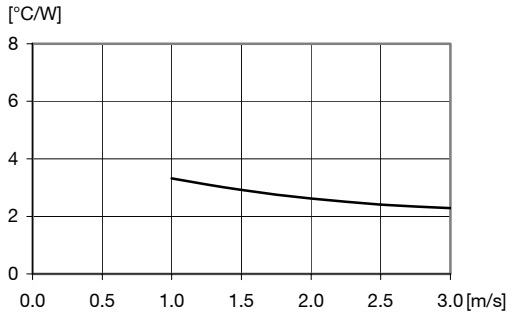

Thermal resistance vs. airspeed measured at the converter. Tested in wind tunnel with airflow and test conditions as per the Thermal consideration section. V_I = {53} V, I_O = 100 A

© Ericsson AB

1.5V, 100A /150W Electrical Specification

PKM4218HC PINB

T_{P1} = -40 to +90ºC, V_I = 36 to 75 V, sense pins connected to output pins unless otherwise specified under Conditions.
Typical values given at: T_{P1} = +25°C, V_I= 53 V_I max I_O, unless otherwise specified under Conditions.

Characteristics		Conditions	min	typ	max	Unit
V_I	Input voltage range		36		75	V
V_{Ioff}	Turn-off input voltage	Decreasing input voltage	30	31	33	V
V_{Ion}	Turn-on input voltage	Increasing input voltage	33	34	35	V
C_I	Internal input capacitance			6		µF
P_O	Output power		0		150	W
η	Efficiency	50 % of max I_O		91.0		%
		max I_O		87.5		
		50 % of max I_O, V_I = 48 V		91.0		
		max I_O, V_I = 48 V		87.0		
P_d	Power Dissipation	max I_O		22	30	W
P_{li}	Input idling power	I_O = 0 A, V_I = 53 V		2.5		W
P_{RC}	Input standby power	V_I = 53 V (turned off with RC)		0.14		W
f_s	Switching frequency	0-100 % of max I_O	140	155	170	kHz

V_{Oi}	Output voltage initial setting and accuracy	T_{P1} = +25°C, V_I = 53 V, I_O = 100 A	1.47	1.50	1.53	V
V_O	Output adjust range	See operating information	1.35		1.65	V
	Output voltage tolerance band	0-100 % of max I_O	1.45		1.55	V
	Idling voltage	I_O = 0 A	1.47		1.53	V
	Line regulation	max I_O		3	5	mV
	Load regulation	V_I = 53 V, 0-100 % of max I_O		10	15	mV
V_{tr}	Load transient voltage deviation	V_I = 53 V, Load step 25-75-25 % of max I_O, di/dt = 3 A/µs see Note 1		±300	±450	mV
t_{tr}	Load transient recovery time			80	120	µs
t_r	Ramp-up time (from 10−90 % of V_{Oi})	10-100 % of max I_O	2	4	8	ms
t_s	Start-up time (from V_I connection to 90 % of V_{Oi})		3	7	15	ms
t_f	V_I shut-down fall time (from V_I off to 10 % of V_O)	max I_O		0.04		ms
		I_O = 0.2 A		12		ms
t_{RC}	RC start-up time	max I_O		7		ms
	RC shut-down fall time (from RC off to 10 % of V_O)	max I_O		0.07		ms
		I_O = 0.2 A		12		ms
I_O	Output current		0		100	A
I_{lim}	Current limit threshold	T_{P1} < max T_{P1}	105	125	140	A
I_{sc}	Short circuit current	T_{P1} = 25ºC, see Note 2		135	160	A
C_{out}	Recommended Capacitive Load	T_{P1} = 25ºC, see Note 3	0		10000	µF
V_{Oac}	Output ripple & noise	See ripple & noise section, max I_O, V_{Oi}		100	200	mVp-p
OVP	Over voltage protection	T_{P1} = +25°C, V_I = 53 V, 10-100 % of max I_O	1.8	1.9	2.0	V

Note 1: (Cout used at load transient test: 100 uF/A and ESR<5 mohm)
Note 2: (See Operating Information section)
Note 3: (Cout: ESR<5 mohm)

1.5V, 100A /150W Typical Characteristics

PKM4218HC PINB

Efficiency

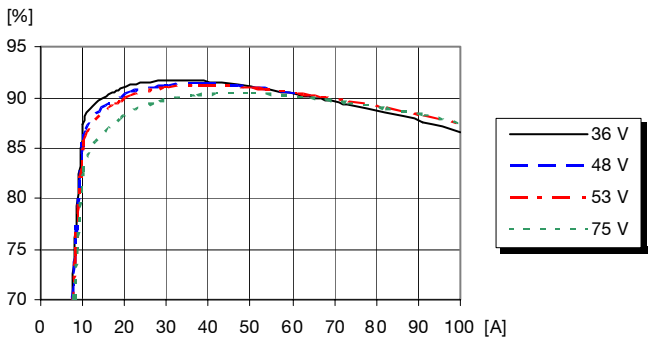

Efficiency vs. load current and input voltage at T_{P1} = +25°C

Power Dissipation

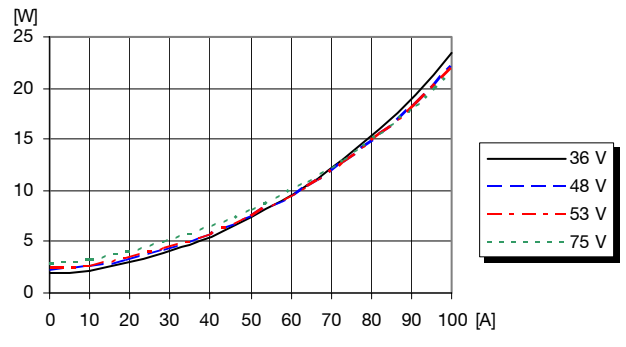

Dissipated power vs. load current and input voltage at T_{P1} = +25°C

Output Characteristics

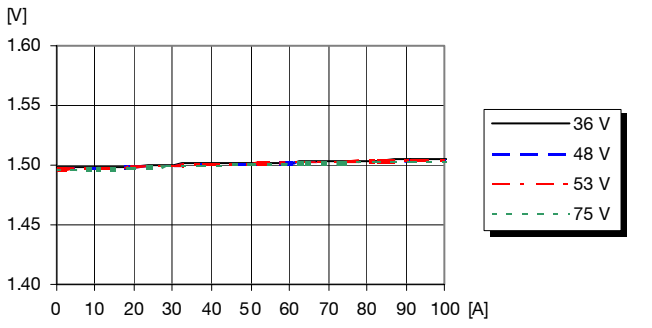

Output voltage vs. load current at T_{P1} = +25°C

Current Limit Characteristics

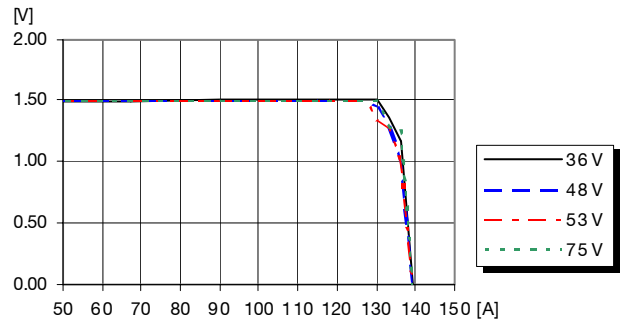

Output voltage vs. load current at I_O > max I_O , T_{P1} = +25°C

1.5V, 100A /150W Typical Characteristics

PKM4218HC PINB

Start-up

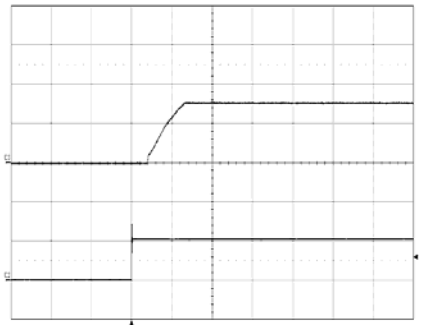

Start-up enabled by connecting V_I at:
T_{P1} = +25°C, V_I = 53 V,
I_O = 100 A resistive load.

Top trace: output voltage (1.0 V/div.).
Bottom trace: input voltage (50 V/div.).
Time scale: (5 ms/div.).

Shut-down

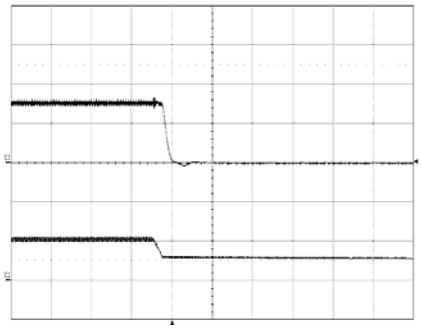

Shut-down enabled by disconnecting V_I at:
T_{P1} = +25°C, V_I = 53 V,
I_O = 100 A resistive load.

Top trace: output voltage (1.0 V/div.).
Bottom trace: input voltage (50 V/div.).
Time scale: (0.1 ms/div.).

Output Ripple & Noise

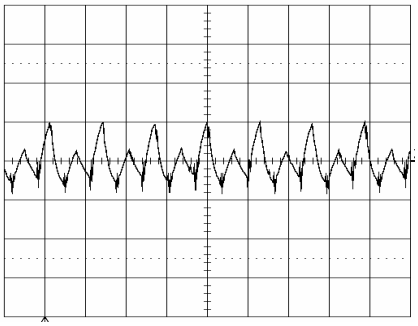

Output voltage ripple at:
T_{P1} = +25°C, V_I = 53 V,
I_O = 100 A resistive load.

Trace: output voltage (50 mV/div.).
Time scale: (5 µs/div.).

Output Load Transient Response

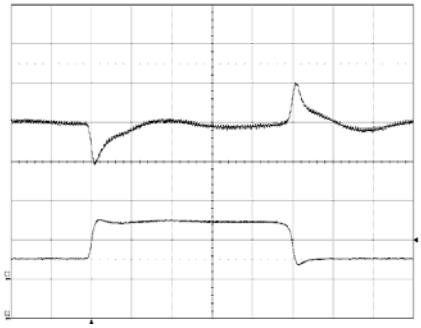

Output voltage response to load current step-change (25-75-25 A) at:
T_{P1} =+25°C, V_I = 53 V.

Top trace: output voltage (300 mV/div.).
Bottom trace: load current (50 A/div.).
Time scale: (0.1 ms/div.).

Output Voltage Adjust (see operating information)

Passive adjust
The resistor value for an adjusted output voltage is calculated by using the following equations:

Output Voltage Adjust Upwards, Increase:

$$Radj = 5.11\left(\frac{Vo(100+\Delta\%)}{1.225\times\Delta\%} - \frac{100+2\times\Delta\%}{\Delta\%}\right)\text{k}\Omega$$

Example: Increase 4% =>V_{out} = 1.56 Vdc

$$Radj = 5.11\left(\frac{1.5\times(100+4)}{1.225\times 4} - \frac{100+2\times 4}{4}\right)\text{k}\Omega = 24.7\,\text{k}\Omega$$

Output Voltage Adjust downwards, Decrease:

$$Radj = 5.11\left(\frac{100}{\Delta\%} - 2\right)\text{k}\Omega$$

Example: Decrease 4% =>V_{out} = 1.44Vdc

$$Radj = 5.11\left(\frac{100}{4} - 2\right)\text{k}\Omega = 117\text{k}\Omega$$

1.5V, 100A / 150W Typical Characteristics

PKM4218HC PINB

Output Current Derating – Open frame

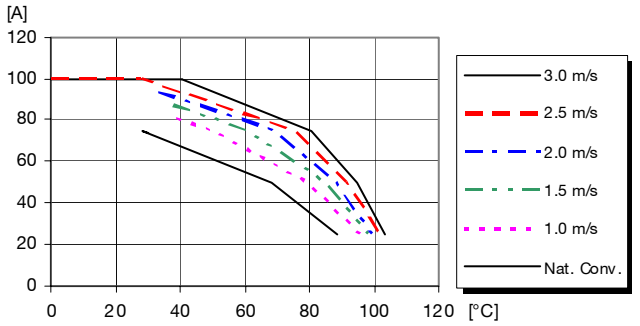

Available load current vs. ambient air temperature and airflow at V_I = 53 V. See Thermal Consideration section.

Output Current Derating – Base plate

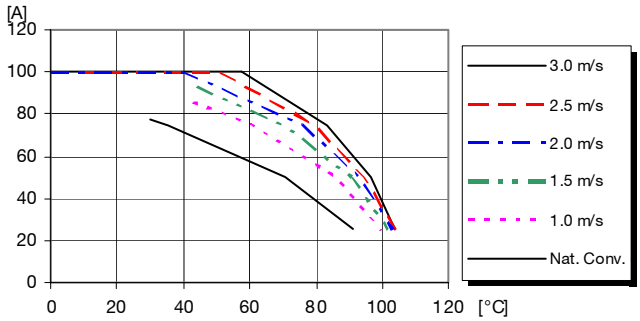

Available load current vs. ambient air temperature and airflow at V_I = 53 V. See Thermal Consideration section.

Thermal Resistance – Base plate

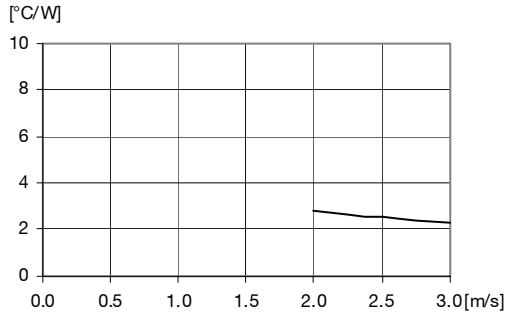

Thermal resistance vs. airspeed measured at the converter. Tested in wind tunnel with airflow and test conditions as per the Thermal consideration section. V_I = 53 V, I_O = 100 A

© Ericsson AB

1.8V, 100A /180W Electrical Specification

PKM4218GC PINB

T_{P1} = -40 to +90ºC, V_I = 36 to 75 V, sense pins connected to output pins unless otherwise specified under Conditions.
Typical values given at: T_{P1} = +25°C, V_I= 53 V_I max I_O, unless otherwise specified under Conditions.

Characteristics		Conditions	min	typ	max	Unit
V_I	Input voltage range		36		75	V
V_{Ioff}	Turn-off input voltage	Decreasing input voltage	30	32	34	V
V_{Ion}	Turn-on input voltage	Increasing input voltage	33	34	35	V
C_I	Internal input capacitance			6		µF
P_O	Output power	see Note 1	0		180	W
η	Efficiency	50 % of max I_O		91.5		%
		max I_O		88.0		
		50 % of max I_O, V_I = 48 V		91.5		
		max I_O, V_I = 48 V		88.0		
P_d	Power Dissipation	max I_O		24	33	W
P_{li}	Input idling power	I_O = 0 A, V_I = 53 V		3		W
P_{RC}	Input standby power	V_I = 53 V (turned off with RC)		0.11		W
f_s	Switching frequency	0-100 % of max I_O	140	155	170	kHz

V_{Oi}	Output voltage initial setting and accuracy	T_{P1} = +25°C, V_I = 53 V, I_O = 100 A	1.76	1.80	1.84	V
V_O	Output adjust range	See operating information (see Note 2)	1.62		1.98	V
	Output voltage tolerance band	10-100 % of max I_O	1.75		1.85	V
	Idling voltage	I_O = 0 A	1.76		1.84	V
	Line regulation	max I_O		10	15	mV
	Load regulation	V_I = 53 V, 0-100 % of max I_O		10	15	mV
V_{tr}	Load transient voltage deviation	V_I = 53 V, Load step 25-75-25 % of max I_O, di/dt = 1 A/µs see Note 3		±250	±400	mV
t_{tr}	Load transient recovery time			100	200	µs
t_r	Ramp-up time (from 10−90 % of V_{Oi})	10-100 % of max I_O	2	4	6	ms
t_s	Start-up time (from V_I connection to 90 % of V_{Oi})		3	6	12	ms
t_f	V_I shut-down fall time (from V_I off to 10 % of V_O)	max I_O		0.05		ms
		I_O = 0 A		35		s
t_{RC}	RC start-up time	max I_O		6		ms
	RC shut-down fall time (from RC off to 10 % of V_O)	max I_O		0.1		ms
		I_O = 0 A		35		s
I_O	Output current	see Note 4	0		100	A
I_{lim}	Current limit threshold	T_{P1} < max T_{P1}	105	125	140	A
I_{sc}	Short circuit current	T_{P1} = 25ºC, see Note 5		135	160	A
C_{out}	Recommended Capacitive Load	T_{P1} = 25ºC, see Note 6	0		10000	µF
V_{Oac}	Output ripple & noise	See ripple & noise section, max I_O, V_{Oi}		120	240	mVp-p
OVP	Over voltage protection	T_{P1} = +25°C, V_I = 53 V, 0-100 % of max I_O	2.1	2.4	2.7	V

Note 1: At V_I under 38V, max output power is 162W
Note 2: V_{adj} +10% minimum V_I is 38V and max output current is 75A
Note 3: C_{out} used at load transient test: 100 uF/A and ESR<5 mohm
Note 4: At V_I under 38V, max output current is 90A
Note 5: See Operating Information section
Note 6: C_{out} :ESR-value <5mohm

1.8V, 100A /180W Typical Characteristics

PKM4218GC PINB

Efficiency

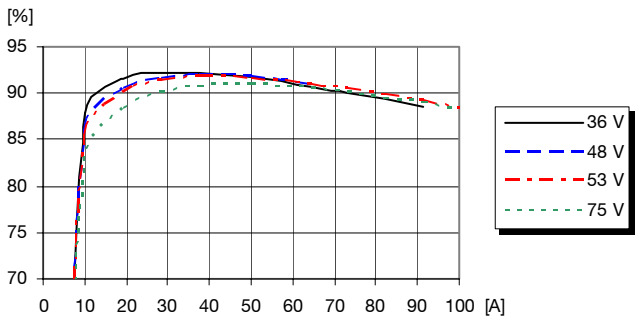

Efficiency vs. load current and input voltage at T_{P1} = +25°C

Power Dissipation

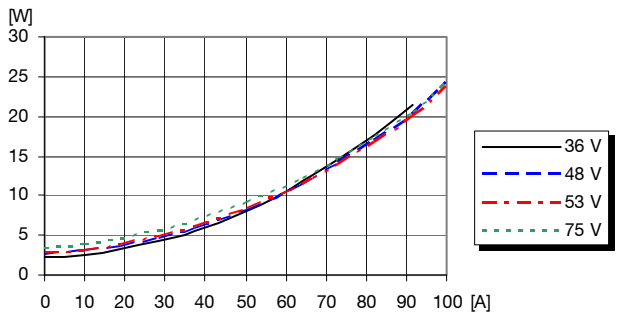

Dissipated power vs. load current and input voltage at T_{P1} = +25°C

Output Characteristics

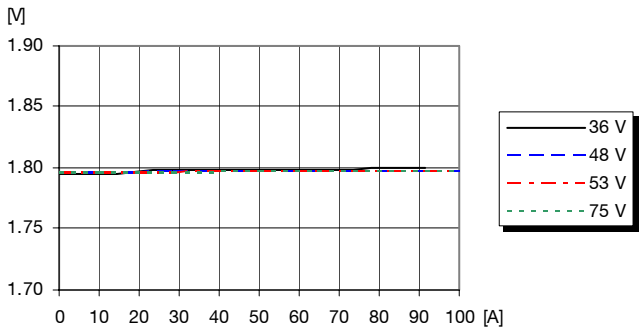

Output voltage vs. load current at T_{P1} = +25°C

Current Limit Characteristics

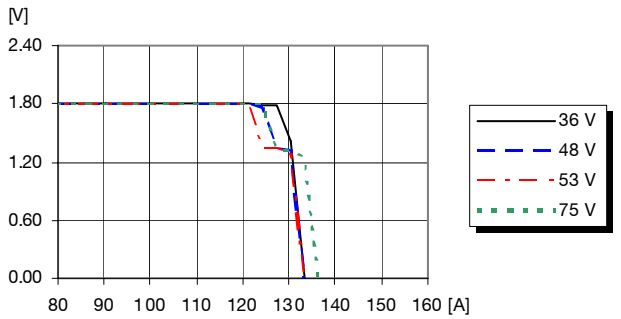

Output voltage vs. load current at I_O > max I_O , T_{P1} = +25°C

1.8V, 100A /180W Typical Characteristics

PKM4218GC PINB

Start-up

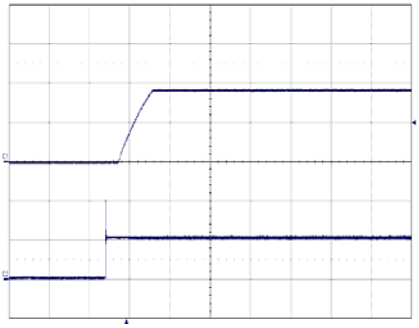

Start-up enabled by connecting V_I at:
T_{P1} = +25°C, V_I = 53 V,
I_O = 100 A resistive load.

Top trace: output voltage (1 V/div.).
Bottom trace: input voltage (50 V/div.).
Time scale: (5 ms/div.).

Shut-down

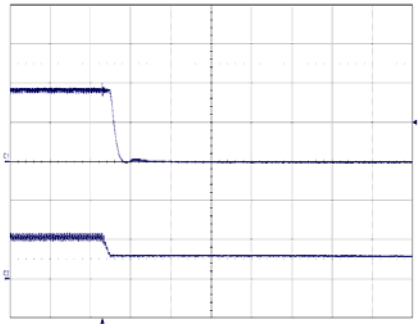

Shut-down enabled by disconnecting V_I at:
T_{P1} = +25°C, V_I = 53 V,
I_O = 100 A resistive load.

Top trace: output voltage (1 V/div.).
Bottom trace: input voltage (50 V/div.).

Output Ripple & Noise

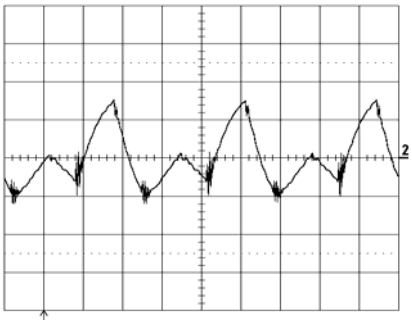

Output voltage ripple at:
T_{P1} = +25°C, V_I = 53 V,
I_O = 100 A resistive load.

Trace: output voltage (50 mV/div.).
Time scale: (2 µs/div.).

Output Load Transient Response

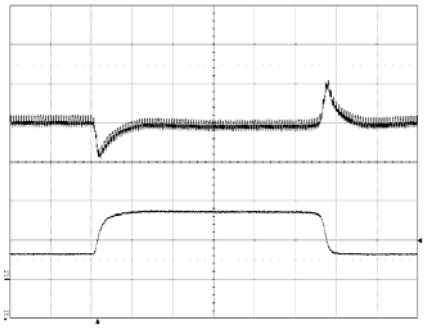

Output voltage response to load current step-change (25-75-25 A}) at:
T_{P1} =+25°C, V_I = 53 V.

Top trace: output voltage (250 mV/div.}).
Bottom trace: load current (50 A/div.).

Output Voltage Adjust (see operating information)

Passive adjust
The resistor value for an adjusted output voltage is calculated by using the following equations:

Output Voltage Adjust Upwards, Increase:

$$Radj = 5.11\left(\frac{Vo(100+\Delta\%)}{1.225\times\Delta\%} - \frac{100+2\times\Delta\%}{\Delta\%}\right)\text{k}\Omega$$

Example: Increase 4% =>V_{out} = 1.872 Vdc

$$Radj = 5.11\left(\frac{1.8\times(100+4)}{1.225\times 4} - \frac{100+2\times 4}{4}\right)\text{k}\Omega = 57\ \text{k}\Omega$$

Output Voltage Adjust downwards, Decrease:

$$Radj = 5.11\left(\frac{100}{\Delta\%} - 2\right)\text{k}\Omega$$

Example: Decrease 4% =>V_{out} = 1.728Vdc

$$Radj = 5.11\left(\frac{100}{4} - 2\right)\text{k}\Omega = 117\text{k}\Omega$$

1.8V, 100A /180W Typical Characteristics

PKM4218GC PINB

Output Current Derating – Open frame

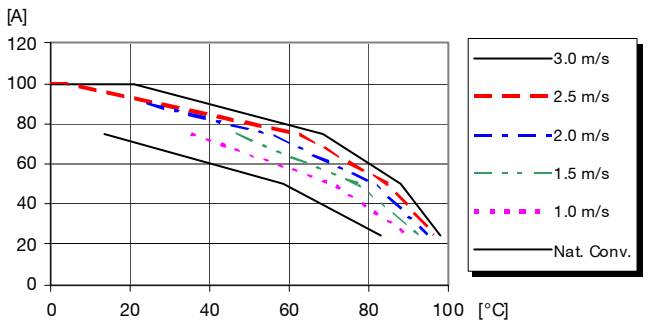

Available load current vs. ambient air temperature and airflow at V_I = 53 V. See Thermal Consideration section.

Output Current Derating – Base plate

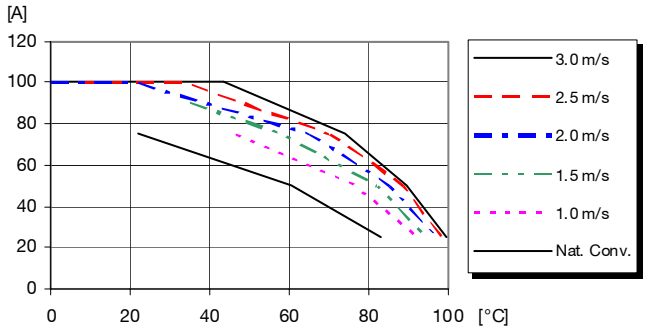

Available load current vs. ambient air temperature and airflow at V_I = 53 V. See Thermal Consideration section.

Thermal Resistance – Base plate

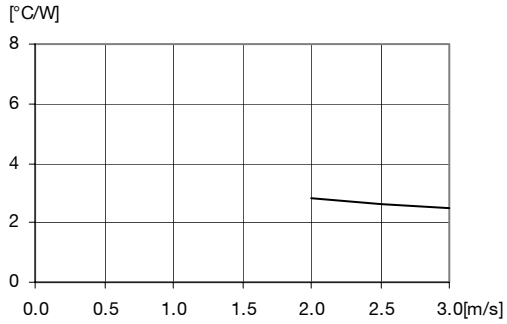

Thermal resistance vs. airspeed measured at the converter. Tested in wind tunnel with airflow and test conditions as per the Thermal consideration section. V_I = 53 V, I_O = 100 A

EMC Specification

Conducted EMI measured according to EN55022, CISPR 22 and FCC part 15J (see test set-up). See Design Note 009 for further information. The fundamental switching frequency is 155 kHz for PKM 4118LC PINB @ V_I = 53 V, max I_O.

Conducted EMI Input terminal value (typ)

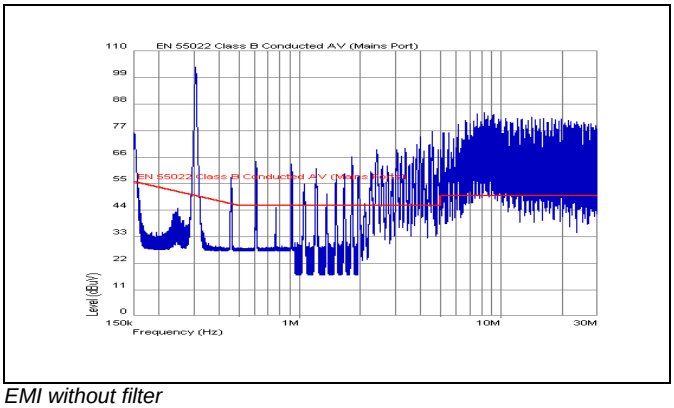

EMI without filter

External filter (class B)

Required external input filter in order to meet class B in EN 55022, CISPR 22 and FCC part 15J.

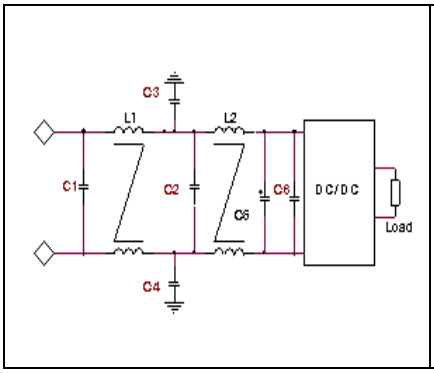

Filter components:
C1,2,6 = 1 µF/100V Ceramic

C3,4 = 2.2 nF/1500V Ceramic

C5 = 100 µF/100V Electrolytic

L1,2 = 1.47 mH 2.8A, Common Mode

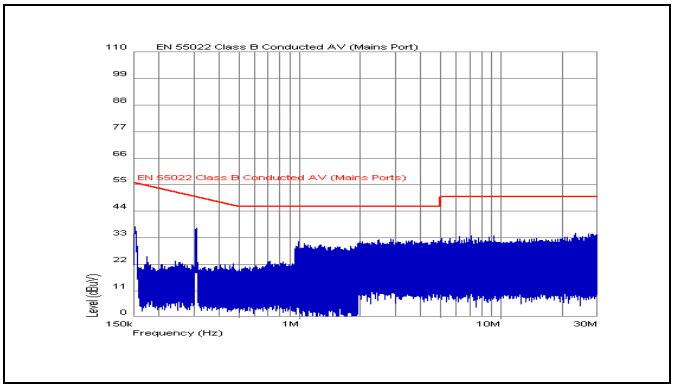

EMI with filter

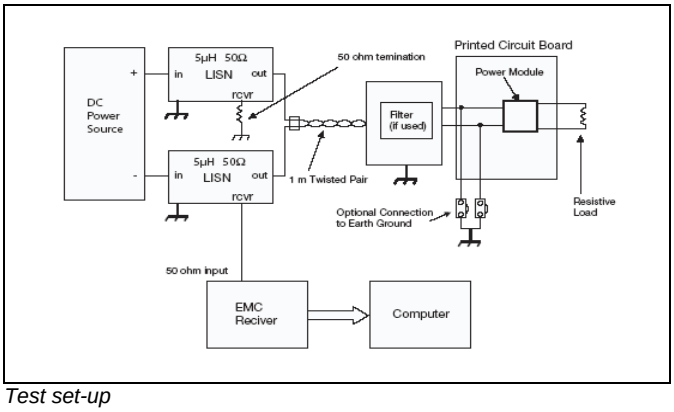

Test set-up

Layout recommendations

The radiated EMI performance of the Product will depend on the PCB layout and ground layer design. It is also important to consider the stand-off of the product. If a ground layer is used, it should be connected to the output of the product and the equipment ground or chassis.

A ground layer will increase the stray capacitance in the PCB and improve the high frequency EMC performance.

Output ripple and noise

Output ripple and noise measured according to figure below. See Design Note 022 for detailed information.

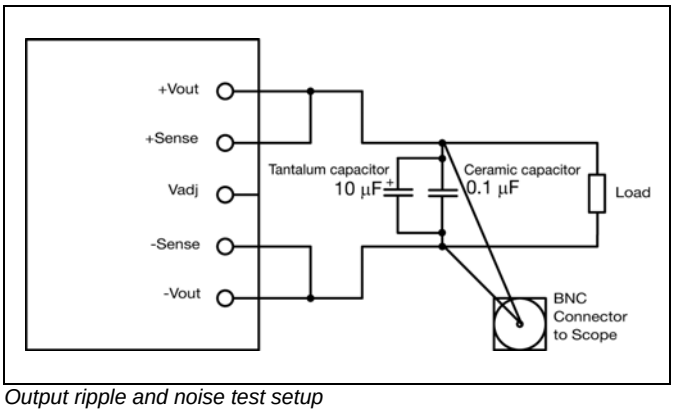

Output ripple and noise test setup

© Ericsson AB

Operating information

Input Voltage

The input voltage range 36 to 75Vdc meets the requirements of the European Telecom Standard ETS 300 132-2 for normal input voltage range in –48 and –60 Vdc systems, -40.5 to -57.0 V and –50.0 to -72 V respectively.
At input voltages exceeding 75 V, the power loss will be higher than at normal input voltage and T_{P1} must be limited to absolute max +125°C. The absolute maximum continuous input voltage is 80 Vdc.

Turn-off Input Voltage

The products monitor the input voltage and will turn on and turn off at predetermined levels.
The minimum hysteresis between turn on and turn off input voltage is 1V.

Remote Control (RC)

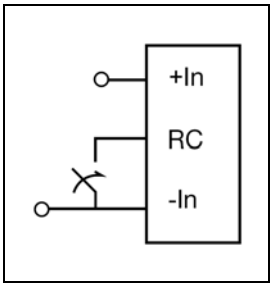

The products are fitted with a remote control function referenced to the primary negative input connection (-In), with negative and positive logic options available. The RC function allows the product to be turned on/off by an external device like a semiconductor or mechanical switch. The RC pin has an internal pull up resistor to +In.

The maximum required sink current is 1 mA. When the RC pin is left open, the voltage generated on the RC pin is 3.5 – 6 V.
The second option is “positive logic” remote control, which can be ordered by adding the suffix “P” to the end of the part number. The converter will turn on when the input voltage is applied with the RC pin open. Turn off is achieved by connecting the RC pin to the - In. To ensure safe turn off the voltage difference between RC pin and the - In pin shall be less than 1V. The converter will restart automatically when this connection is opened.

See Design Note 021 for detailed information.

Input and Output Impedance

The impedance of both the power source and the load will interact with the impedance of the DC/DC converter. It is most important to have a low characteristic impedance, both at the input and output, as the converters have a low energy storage capability. The PKM 4000CSeries DC/DC converters have been designed to be completely stable without the need for external capacitors on the input or the output circuits. The performance in some applications can be enhanced by addition of external capacitance as described under maximum capacitive load. If the distribution of the input voltage source to the converter contains significant inductance, the addition of a 100µF capacitor across the input of the converter will help insure stability. This capacitor
is not required when powering the DC/DC converter from a low impedance source with short, low inductance, input power leads.

External Decoupling Capacitors

When powering loads with significant dynamic current requirements, the voltage regulation at the point of load can be improved by addition of decoupling capacitors at the load. The most effective technique is to locate low ESR ceramic and electrolytic capacitors as close to the load as possible, using several parallel capacitors to lower the effective ESR. The ceramic capacitors will handle high-frequency dynamic load changes while the electrolytic capacitors are used to handle low frequency dynamic load changes. Ceramic capacitors will also reduce any high frequency noise at the load.
It is equally important to use low resistance and low inductance PCB layouts and cabling.
External decoupling capacitors will become part of the control loop of the DC/DC converter and may affect the stability margins. As a “rule of thumb”, 100 µF/A of output current can be added without any additional analysis. The ESR of the capacitors is a very important parameter. Power Modules guarantee stable operation with a verified ESR value of >10 m across the output connections.
For further information please contact your local Ericsson Power Modules representative.

Output Voltage Adjust (V_{adj})

All PKM 4000CSeries DC/DC converters have an Output Voltage adjust pin (Vadj). This pin can be used to adjust the output voltage above or below Output voltage initial setting. When increasing the output voltage, the voltage at the output pins (including any remote sense offset) must be kept below the maximum output adjust range. Also note that at increased output voltages the maximum power rating of the converter remains the same, and the output current capability will decrease correspondingly.
To decrease the output voltage the resistor should be connected between Vadj pin and –Sense pin. To increase the voltage the resistor should be connected between Vadj pin and +Sense pin. The resistor value of the Output voltage adjust function is according to information given under the output section.

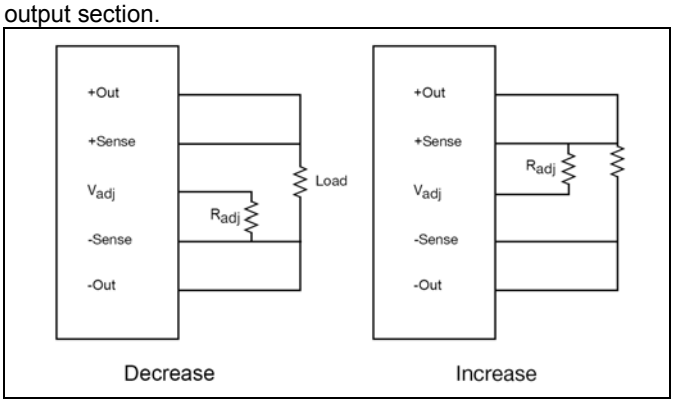

Operating information continued

© Ericsson AB

Parallel Operation

The PKM 4000CSeries DC/DC converters can be paralleled for redundancy if external o-ring diodes are used in series with the outputs. It is not recommended to parallel the PKM 4000C Series DC/DC converters for increased power without using external current sharing circuits.

See Design Note 006 for detailed information.

Remote Sense

All PKM 4000CSeries DC/DC converters have remote sense that can be used to compensate for moderate amounts of resistance in the distribution system and allow for voltage regulation at the load or other selected point. The remote sense lines will carry very little current and do not need a large cross sectional area. However, the sense lines on the Pcb should be located close to a ground trace or ground plane. In a discrete wiring situation, the use of twisted pair wires or other technique to reduce noise susceptibility is highly recommended. The remote sense circuitry will compensate for up to 10% voltage drop between the sense voltage and the voltage at the output pins. The output voltage and the remote sense voltage offset must be less than the minimum over voltage trip point. If the remote sense is not needed the –Sense should be connected to –Out and +Sense should be connected to +Out.

Over Temperature Protection (OTP)

The PKM 4000CSeries DC/DC converters are protected from thermal overload by an internal over temperature shutdown circuit. When the Pcb temperature (TC reference point) exceeds the temperature trig point (~130 °C) the OTP circuit will cut down output power. The converter will stop until safe operating temperature is restored. Hysteresis between OTP trig point and restart is approx 15 °C. Time between OTP and restart is dependant on cooling of DC/DC converter.

Over Voltage Protection (OVP)

The PKM 4000CSeries DC/DC converters have output overvoltage protection. In the event of an output overvoltage condition, the converter will shut down immediately. The converter make continous attempts to start up (non-latching mode) and resume normal operation automatically.

Over Current Protection (OCP)

The PKM 4000CSeries DC/DC converters include current limiting circuitry that allows them to withstand continuous overloads or short circuit conditions on the output. The output voltage will decrease towards zero for output currents in excess of max output current (Iomax).

The converter will resume normal operation after removal of the overload. The load distribution system should be designed to carry the maximum output short circuit current specified.

Thermal Consideration

General

The products are designed to operate in different thermal environments and sufficient cooling must be provided to ensure reliable operation.

For products mounted on a PCB without a heat sink attached, cooling is achieved mainly by conduction, from the pins to the host board, and convection, which is dependant on the airflow across the product. Increased airflow enhances the cooling of the product. The Output Current Derating graph found in the Output section for each model provides the available output current vs. ambient air temperature and air velocity at V_I = 53 V.

The product is tested on a 254 x 254 mm, 35 µm (1 oz), 16-layer test board mounted vertically in a wind tunnel with a cross-section of 608 x 203 mm.

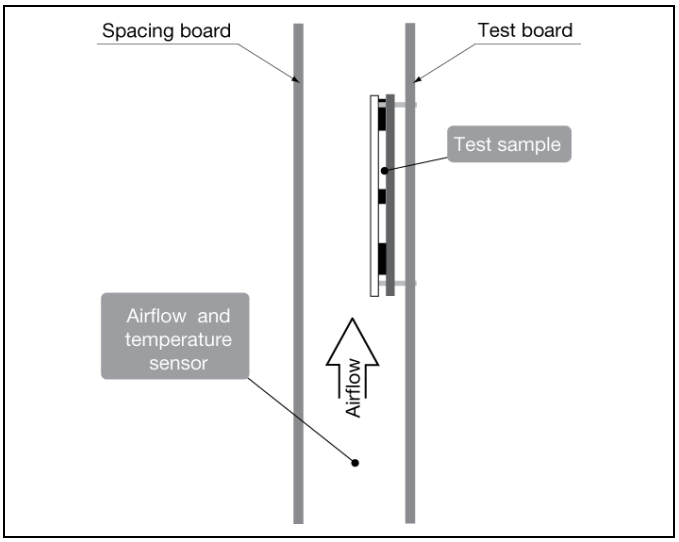

Proper cooling of the product can be verified by measuring the temperature at positions P1 and P2. The temperature at these positions should not exceed the max values provided in the table below. The number of points may vary with different thermal design and topology.

See Design Note 019 for further information.

Position	Description	Temp. limit
P1	Mosfet (T_{P1})	125º C
P2	Controller	125º C

© Ericsson AB

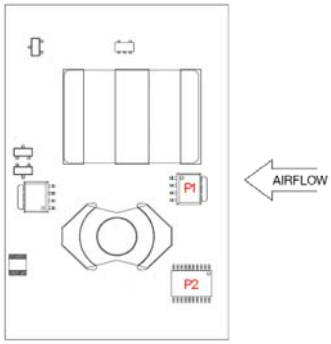

Open frame

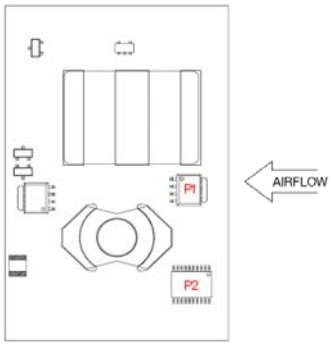

Base plate

Definition of reference temperature T_{P1}

The reference temperature is used to monitor the temperature limits of the product. Temperatures above maximum T_{P1}, meassured at the reference point P1 are not allowed and may cause degradation or permanent damage to the product. T_{P1} is also used to define the temperature range for normal operating conditions. T_{P1} is defined by the design and used to guarantee safety margins, proper operation and high reliability ot the product.

Ambient Temperature Calculation

For products with base plate the maximum allowed ambient temperature can be calculated by using the thermal resistance.

1. The power loss is calculated by using the formula
((1/η) - 1) × output power = power losses (Pd).
η = efficiency of product. E.g. 87.5% = 0.875

2. Find the thermal resistance (Rth) in the Thermal Resistance graph found in the Output section for each model. ***Note that the thermal resistance can be significantly reduced if a heat sink is mounted on the top of the base plate.***

Calculate the temperature increase (ΔT).
ΔT = Rth x Pd

3. Max allowed ambient temperature is:
Max T_{P1} - ΔT.

E.g. PKM 4218HC PI at 2m/s:

1. ((1/0.875) - 1) × 150 W = 21.42 W

2. 21.42 W × 2.8°C/W = 60°C

3. 125 °C – 60°C = max ambient temperature is 65°C

The actual temperature will be dependent on several factors such as the PCB size, number of layers and direction of airflow.

© Ericsson AB

Connections

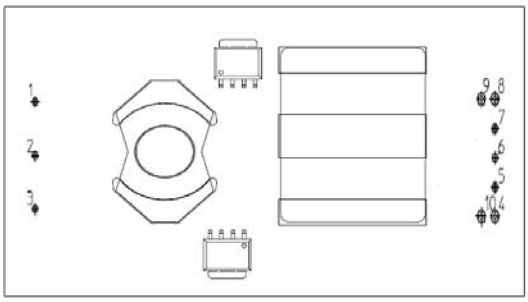

Top view

Pin	Designation	Function
1	+In	Positive input
2	RC	Remote control
3	- In	Negative input
4,10	- Out	Negative output
5	- Sen	Negative remote sense
6	Vadj	Output voltage adjust
7	+ Sen	Positive remote sense
8,9	+ Out	Positive output

Mechanical Information

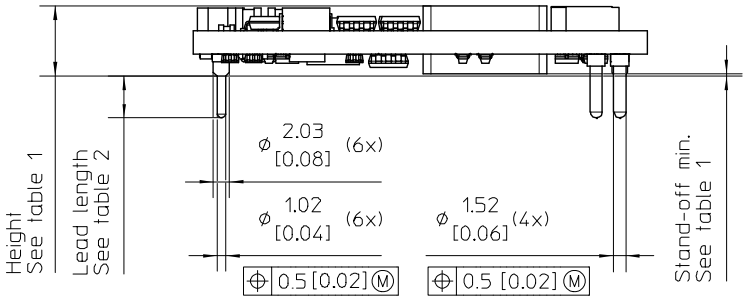

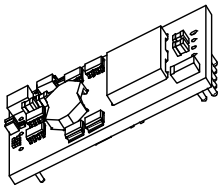

Table 1

Height option	Height max.	Stand-off min.
Standard	9.35 [0.368]	0.07 [0.003]
M	10.53 [0.415]	1.25 [0.049]

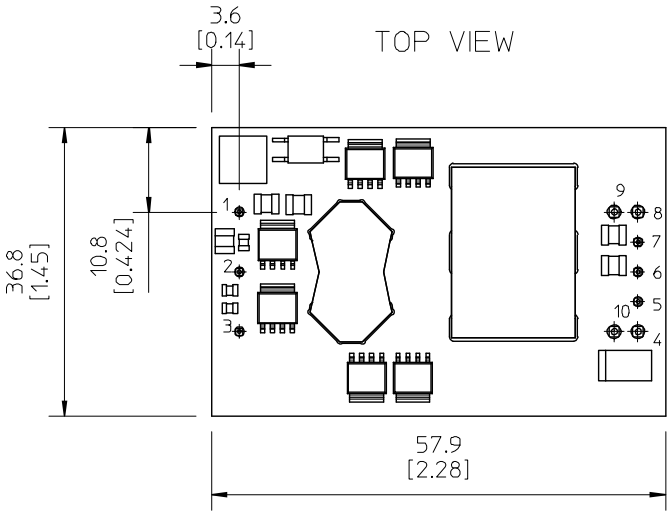

Table 2

Pin option	Lead Length
Standard	5.33 [0.210]
LA	3.69 [0.145]
LB	4.57 [0.180]

Weight: Typical 40g

Pins:
Material, pins 1-3, 6-8: Brass
Material, pins 4-5, 9-10: Copper alloy
Plating: 0,1 µm Gold over 2 µm Nickel

Recommended footprint - TOP VIEW

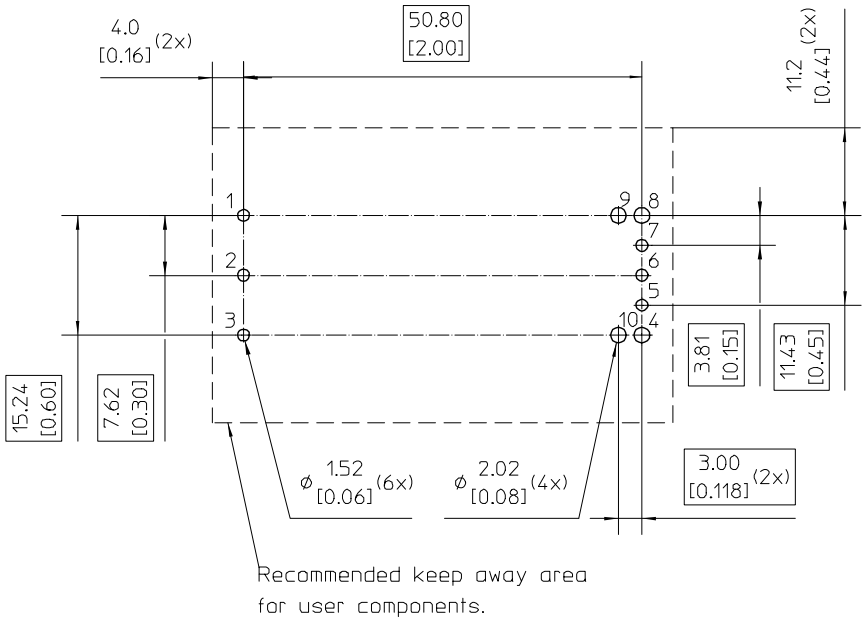

All dimensions are in mm [inches]
Tolerances unless specified
x.x ± 0.5 [0.02]
x.xx ± 0.25 [0.01]
Not applied on the recommended footprint

Mechanical Information- Base plate version

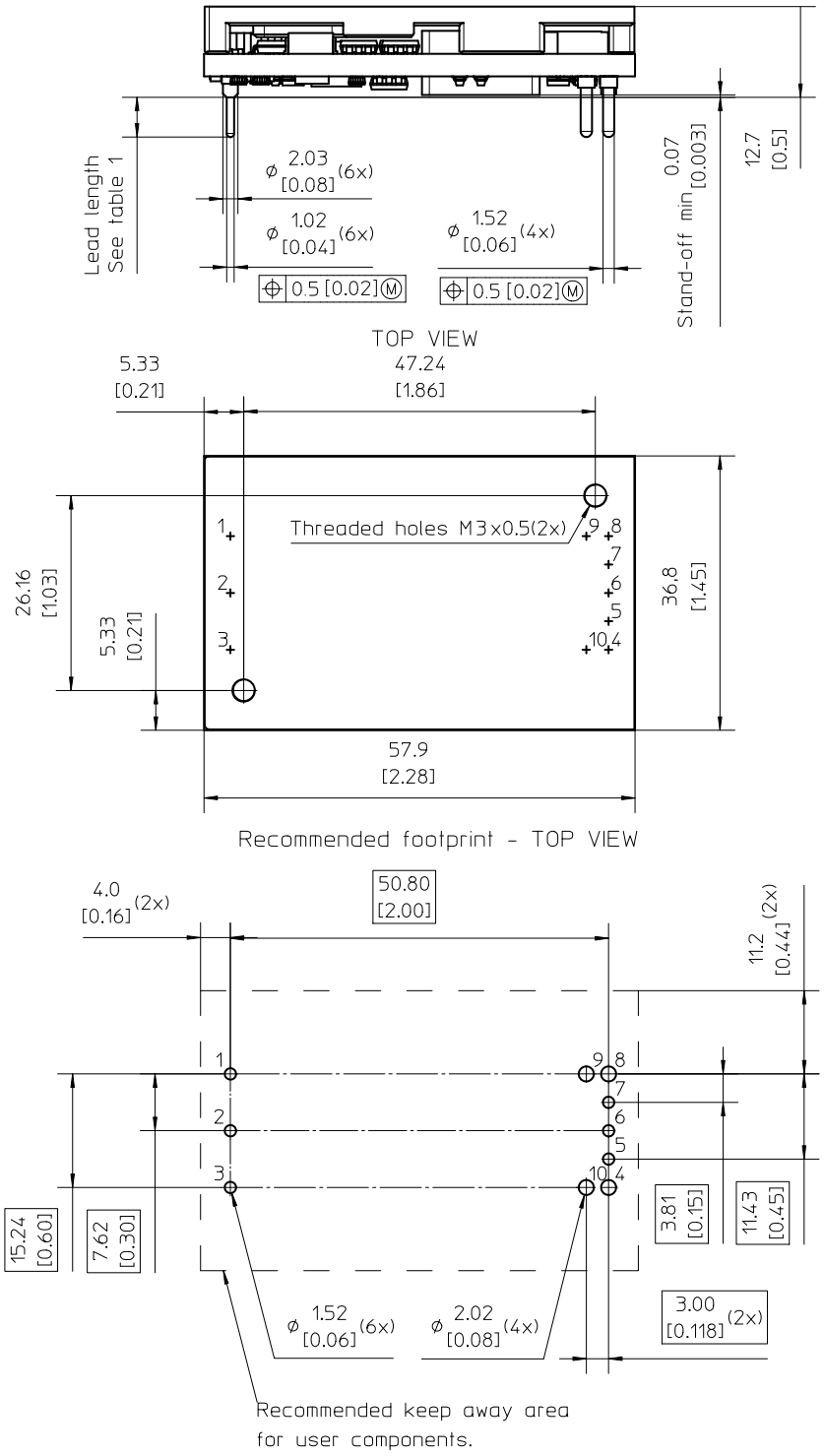

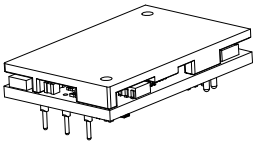

Table 1

Pin option	Lead Length
Standard	5.33 [0.210]
LA	3.69 [0.145]
LB	4.57 [0.180]

Weight: Typical 65g

Pins:
Material, pins 1-3, 5-7: Brass
Material, pins 4-8, 9-10: Copper alloy
Plating: 0,1 µm Gold over 2 µm Nickel

All dimensions are in mm [inches]
Tolerances unless specified
x.x ± 0.5 [0.02]
x.xx ± 0.25 [0.01]
Not applied on the recommended footprint

© Ericsson AB

Soldering Information - Hole Mounting

The product is intended for through hole mounting in a PCB. When wave soldering is used, the temperature on the pins is specified to maximum 260°C for maximum 10 seconds.

A maximum preheat rate of 4°C/s and maximum preheat temperature of 150°C is suggested. When soldering by hand, care should be taken to avoid direct contact between the hot soldering iron tip and the pins for more than a few seconds in order to prevent overheating.

A no-clean flux is recommended to avoid entrapment of cleaning fluids in cavities inside the product or between the product and the host board. The cleaning residues may affect long time reliability and isolation voltage.

Delivery Package Information

The products are delivered in antistatic trays or foam

Tray Specifications	
Material	Antistatic trays or Polyethylene foam
Surface resistance	10^5 < Ohm/square < 10^{12}
Tray capacity	20 products/tray
Tray height	25.4 mm[1.0 inch]
Tray weight	100 g empty, 1400 g full maximum
Box capacity	20 products/full box

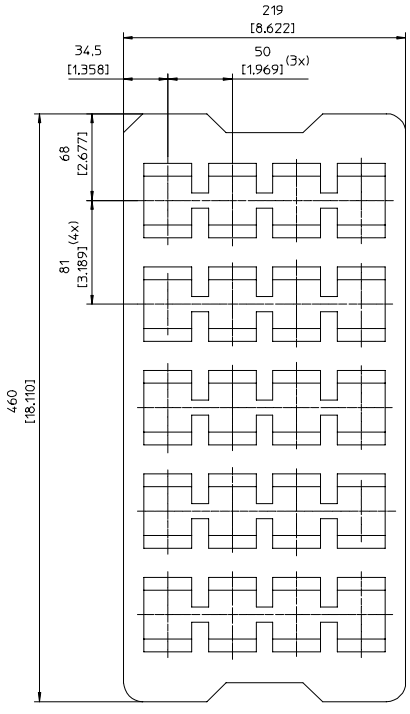

© Ericsson AB

Product Qualification Specification

Characteristics			
External visual inspection	IPC-A-610		
Change of temperature (Temperature cycling)	IEC 60068-2-14 Na	Temperature range Number of cycles Dwell/transfer time	-40 to 100°C 300 30 min/0-1 min
Cold (in operation)	IEC 60068-2-1 Ad.	Temperature T_A Duration	-45°C 72 h
Damp heat	IEC 60068-2-67 Cy	Temperature Humidity Duration	85°C 85 % RH 1000 hours
Storage test	IEC 60068-2-2 Ba	Temperature Duration	125°C 1000 h
Immersion in cleaning solvents	IEC 60068-2-45 XA, method 2	Water Glycol ether Isopropyl alcohol	55°C 35°C 35°C
Mechanical shock	IEC 60068-2-27 Ea	Peak acceleration Duration	200 g 6 ms
Solder heat stability	IEC 60068-2-20 Tb, method 1A	Solder temperature Duration	260°C 10 s
Robustness of terminations	IEC 60068-2-21 Test Ua1	Through hole mount products	All leads
Solder-ability	IEC 60068-2-58 test Td [1]	Preconditioning Temperature, SnPb Eutectic Temperature, Pb-free	150°C dry bake 16 h 235°C 270°C
Vibration, broad-band random	IEC 60068-2-64 test Fh, method 1.	Frequency Acceleration Duration	10 to 500 Hz 0.07 g^2/Hz 10 min in each 3 directions