ERICSSON

Technical Specification

PME 5000F series POL regulator, Input 4.5-5.5 V, Output 6 A/10.8 W	EN/LZT 146 329 R1A February 2006 © Ericsson Power Modules AB

Key Features

- 6A output current (8A peak current)
- 4.5-5.5V input voltage range
- DDR/QDR compatible output voltage
- V_{TT} tracks V_{REF} in range of 0.55V to 1.8V
- Industry standard POLA™ compatible
- 22.1 x 12.57 x 8.51 mm (0.87 x 0.5 x 0.335 in.)
- More than 4.5 million hours MTBF

General Characteristics

- Operating temperature: -40ºC to 85ºC
- Input under voltage protection
- Start up into a pre-biased output safe
- Output short-circuit protection
- On/Off inhibit control (V_{TT} standby)
- Highly automated manufacturing ensures quality
- ISO 9001/14001 certified supplier

Safety Approvals

Design for Environment

Meets requirements in high-temperature lead-free soldering processes.

Contents

General Information 2
Safety Specification 3
Absolute Maximum Ratings 4

Product Program — Ordering No.
0.55-1.8 V/6 A — PME 5118VxF .....
1.25 V/6 A Electrical Specification 5

EMC Specification 8
Operating Information 8
Thermal Consideration 10
Connections 10
Mechanical Information 11
Soldering Information 13
Delivery Information 15
Product Qualification Specification 16

© Ericsson Power Modules AB

General Information

Ordering Information

See Contents for individual product ordering numbers.

Option	Suffix	
Through hole pin	P	PME5118VPF
SMD pin	S	PME5118VSF
SMD pin, leadfree reflow temperature capable	R	PME5118VSRF

Reliability

The Mean Time Between Failure (MTBF) is calculated at full output power and an operating ambient temperature (T_A) of +40°C. Different methods could be used to calculate the predicted MTBF and failure rate which may give different results. Ericsson Power Modules currently uses Telcordia SR332.

Predicted MTBF for the series is:
- 4.49 million hours according to Telcordia SR332, issue 1, Black box technique.

Telcordia SR332 is a commonly used standard method intended for reliability calculations in IT&T equipment. The parts count procedure used in this method was originally modelled on the methods from
MIL-HDBK-217F, Reliability Predictions of Electronic Equipment.
It assumes that no reliability data is available on the actual units and devices for which the predictions are to be made, i.e. all predictions are based on generic reliability parameters.

Compatibility with RoHS requirements

The products are compatible with the relevant clauses and requirements of the RoHS directive 2002/95/EC and have a maximum concentration value of 0.1% by weight in homogeneous materials for lead in other applications other than lead in solder, lead in high melting temperature type solder, lead in glass of electronics components, lead in electronic ceramic parts and lead as an alloying element in copper containing up to 4% lead by weight, mercury, hexavalent chromium, PBB and PBDE and of 0.01% by weight in homogeneous materials for cadmium.

Exemptions in the RoHS directive utilized in the products:
- Lead as an alloying element in copper alloy containing up to 4% lead by weight (used in connection pins made of Brass)
- Lead in high melting temperature type solder (used to solder the die in semiconductor packages)
- Lead in glass of electronics components and in electronic ceramic parts (e.g. fill material in chip resistors)
- Lead in solder for servers, storage and storage array systems, network infrastructure equipment for switching, signalling, transmission as well as network management for telecommunication
(Note: the products are manufactured in lead-free soldering processes and the lead present is only located in the terminal plating finishes on some components)

Quality Statement

The products are designed and manufactured in an industrial environment where quality systems and methods like ISO 9000, 6σ (sigma), and SPC are intensively in use to boost the continuous improvements strategy. Infant mortality or early failures in the products are screened out and they are subjected to an ATE-based final test. Conservative design rules, design reviews and product qualifications, plus the high competence of an engaged work force, contribute to the high quality of our products.

Warranty

Warranty period and conditions are defined in Ericsson Power Modules General Terms and Conditions of Sale.

Limitation of Liability

Ericsson power Modules does not make any other warranties, expressed or implied including any warranty of merchantability or fitness for a particular purpose (including, but not limited to, use in life support applications, where malfunctions of product can cause injury to a person's health or life).

© Ericsson Power Modules AB

Safety Specification

General information

Ericsson Power Modules DC/DC converters and DC/DC regulators are designed in accordance with safety standards IEC/EN/UL60950, *Safety of Information Technology Equipment*.

IEC/EN/UL60950 contains requirements to prevent injury or damage due to the following hazards:

- Electrical shock
- Energy hazards
- Fire
- Mechanical and heat hazards
- Radiation hazards
- Chemical hazards

On-board DC-DC converters are defined as component power supplies. As components they cannot fully comply with the provisions of any Safety requirements without "Conditions of Acceptability". It is the responsibility of the installer to ensure that the final product housing these components complies with the requirements of all applicable Safety standards and Directives for the final product.

Component power supplies for general use should comply with the requirements in IEC60950, EN60950 and UL60950 *"Safety of information technology equipment".*

There are other more product related standards, e.g. IEEE802.3af "Ethernet LAN/MAN Data terminal equipment power", and ETS300132-2 "Power supply interface at the input to telecommunications equipment; part 2: DC", but all of these standards are based on IEC/EN/UL60950 with regards to safety.

Ericsson Power Modules DC/DC converters and DC/DC regulators are UL60950 recognized and certified in accordance with EN60950.

The flammability rating for all construction parts of the products meets requirements for V-0 class material according to IEC 60695-11-10.

The products should be installed in the end-use equipment, in accordance with the requirements of the ultimate application. Normally the output of the DC/DC converter is considered as SELV (Safety Extra Low Voltage) and the input source must be isolated by minimum Double or Reinforced Insulation from the primary circuit (AC mains) in accordance with IEC/EN/UL60950.

Isolated DC/DC converters

It is recommended that a slow blow fuse with a rating twice the maximum input current per selected product be used at the input of each DC/DC converter. If an input filter is used in the circuit the fuse should be placed in front of the input filter.
In the rare event of a component problem in the input filter or in the DC/DC converter that imposes a short circuit on the input source, this fuse will provide the following functions:

- Isolate the faulty DC/DC converter from the input power source so as not to affect the operation of other parts of the system.
- Protect the distribution wiring from excessive current and power loss thus preventing hazardous overheating.

The galvanic isolation is verified in an electric strength test. The test voltage (V_{iso}) between input and output is 1500 Vdc or 2250 Vdc for 60 seconds (refer to product specification).
Leakage current is less than 1 µA at nominal input voltage.

24 V DC systems

The input voltage to the DC/DC converter is SELV (Safety Extra Low Voltage) and the output remains SELV under normal and abnormal operating conditions.

48 and 60 V DC systems

If the input voltage to Ericsson Power Modules DC/DC converter is 75 Vdc or less, then the output remains SELV (Safety Extra Low Voltage) under normal and abnormal operating conditions.

Single fault testing in the input power supply circuit should be performed with the DC/DC converter connected to demonstrate that the input voltage does not exceed 75 Vdc.

If the input power source circuit is a DC power system, the source may be treated as a TNV2 circuit and testing has demonstrated compliance with SELV limits and isolation requirements equivalent to Basic Insulation in accordance with IEC/EN/UL60950.

Non-isolated DC/DC regulators

The input voltage to the DC/DC regulator is SELV (Safety Extra Low Voltage) and the output remains SELV under normal and abnormal operating conditions.

© Ericsson Power Modules AB

Absolute Maximum Ratings

Characteristics			min	typ	max	Unit
T_{ref}	Operating Temperature (see Thermal Consideration section)		–40		85	°C
T_S	Storage temperature		–40		125	°C
V_I	Input voltage		4.5	5	5.5	V
V_{inh}	Inhibit On/Off pin voltage (see Operating Information section)	Positive logic option	V_{in}-0.5		Open	V
		Negative logic option	N/A		N/A	V
V_{adj}	Adjust pin voltage (see Operating Information section)		N/A		N/A	V

Stress in excess of Absolute Maximum Ratings may cause permanent damage. Absolute Maximum Ratings, sometimes referred to as no destruction limits, are normally tested with one parameter at a time exceeding the limits of Output data or Electrical Characteristics. If exposed to stress above these limits, function and performance may degrade in an unspecified manner.

Fundamental Circuit Diagram

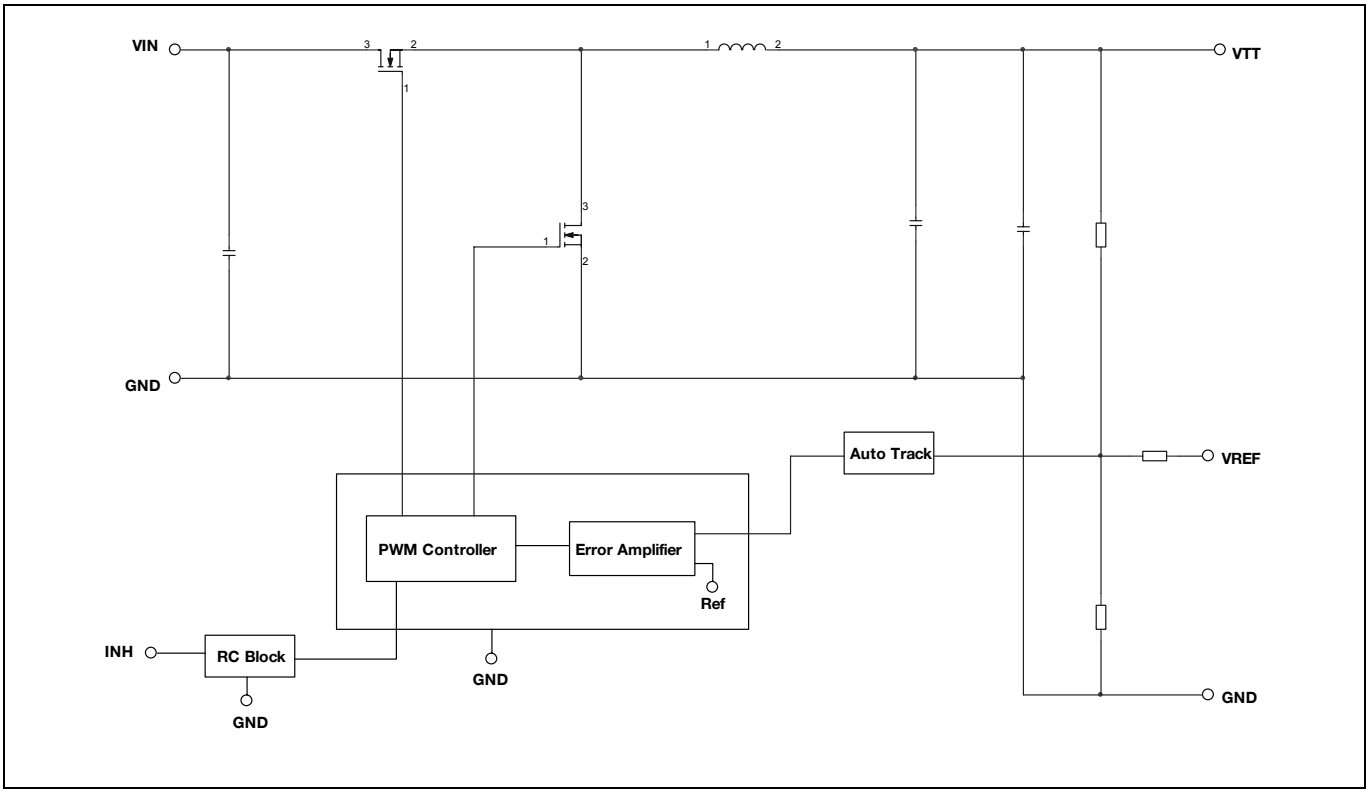

© Ericsson Power Modules AB

1.25 V/6 A Electrical Specification

PME 5118VxF

T_{ref} = -40 to +85ºC, V_I = 4.5 to 5.5 V, V_{REF} = 1.25V, unless otherwise specified under conditions.
Typical values given at: T_{ref} = +25°C, V_I= 5 V, max I_O, unless otherwise specified under conditions.
Additional C_{in}=220uF and C_{out}=470uF. See Operating Information section for selection of capacitor types.
Connect the sense pin, where available, to the output pin.

Characteristics		Conditions	min	typ	max	Unit
V_I	Input voltage range		4.5		5.5	V
V_{Ioff}	Turn-off input voltage	Decreasing input voltage	3.4	3.7		V
V_{Ion}	Turn-on input voltage	Increasing input voltage		4.3	4.45	V
C_I	Internal input capacitance			44		µF
P_O	Output power		0		7.5	W
η	Efficiency	50 % of max I_O		87.2		%
		max I_O		85.7		
P_d	Power Dissipation	max I_O		1.2		W
P_{li}	Input idling power	I_O= 0, V_I = 5 V		250		mW
P_{RC}	Input standby power	V_I = 5 V (turned off with INHIBIT)		25		mW
I_S	Static Input current	V_I = 5 V, max I_O		1.8		A
f_s	Switching frequency	0-100% of max I_O	550	600	650	kHz

V_{Oi}	Output voltage initial setting and accuracy	T_{ref} = +25°C, V_I = 5 V, max I_O	1.240	1.250	1.260	V
V_O	Output voltage tolerance band	10-100% of max I_O	1.240	1.250	1.260	V
	Idling voltage	I_O = 0		1.255		V
	Line regulation	Max I_O		±10		mV
	Load regulation	V_I = 5 V, 0-100% of max I_O		±10		mV
V_{tr}	Load transient voltage deviation	V_I = 5 V, Load step from -1.5A to +1.5A, di/dt = 15 A/µs, see Note 1		25	40	mV
t_{tr}	Load transient recovery time			80		µs
t_r	Ramp-up time (from 10–90 % of V_{Oi})	max I_O		2.6		ms
t_s	Start-up time (from V_I connection to 90% of V_{Oi})			5.1		ms
t_f	Vin shutdown fall time. (From V_I off to 10% of V_O)	Max I_o		180		µs
		I_o = 1A		350		µs
t_{Inh}	INHIBIT start-up time	Max I_o		5.2		ms
	INHIBIT shutdown fall time (From INHIBIT off to 10% of V_O)	Max I_o		50		µs
		I_o = 0.1 A		1.6		ms
I_O	Output current		0		6	A
I_{lim}	Current limit threshold	T_{ref} < max $T_{ref,}$		12		A
V_{Oac}	Output ripple & noise	See ripple & noise section, max I_O, V_{Oi}		20		mVp-p

Note1: Output filter according to Ripple & Noise section

© Ericsson Power Modules AB

1.25 V/6 A Typical Characteristics

PME 5118VxF

Efficiency

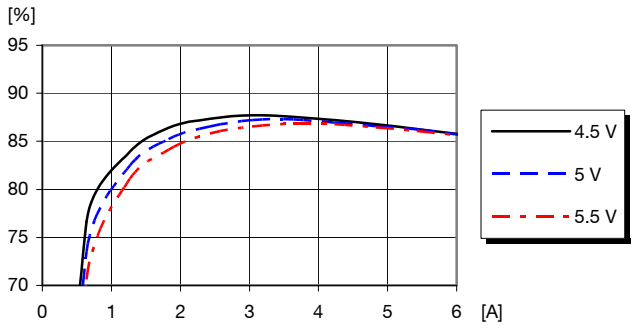

Efficiency vs. load current and input voltage at T_{ref} = +25°C

Power Dissipation

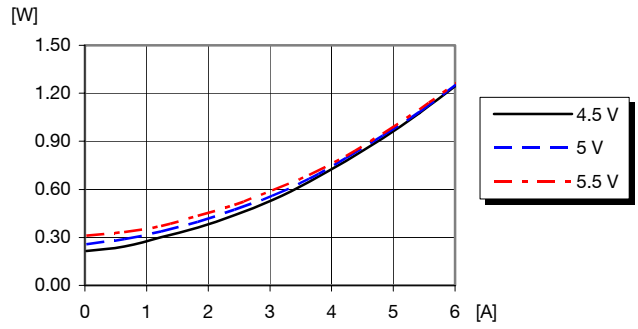

Dissipated power vs. load current and input voltage at T_{ref} = +25°C

Output Current Derating

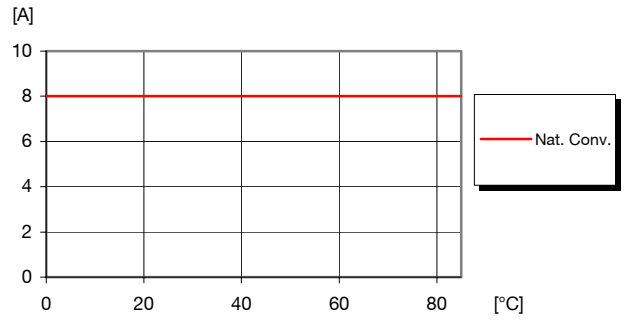

Available load current vs. ambient air temperature and airflow at V_I = 5 V, V_{OUT} = 1.25 V. See Thermal Consideration section.

Output Characteristics

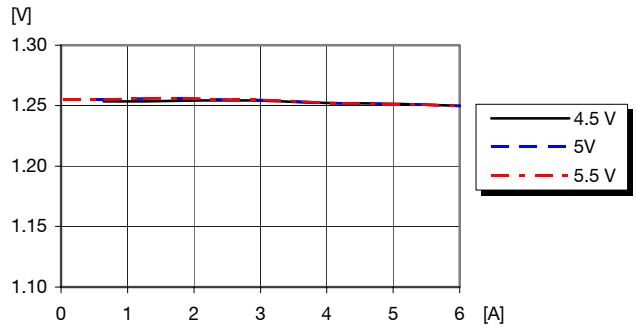

Output voltage vs. load current at T_{ref} = +25°C

© Ericsson Power Modules AB

1.25 V/6 A Typical Characteristics

PME 5118VxF

Start-up

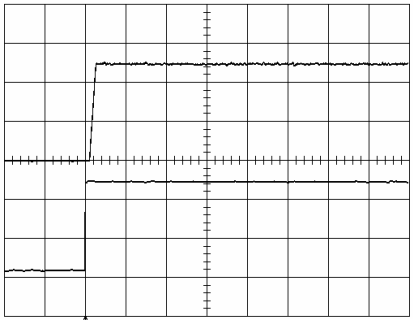

Start-up enabled by connecting V_I at: T_{ref} = +25°C, I_O = 6 A resistive load, V_I = 5 V.

Top trace: output voltage (0.5 V/div). Bottom trace: input voltage (2 V/div). Time scale: 20 ms/div.

Shut-down

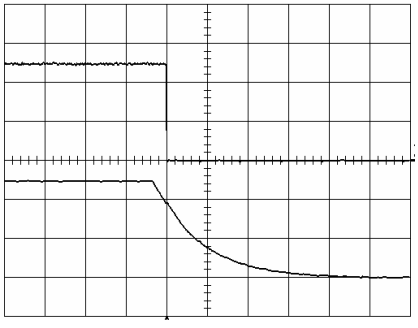

Shut-down enabled by disconnecting V_I at: T_{ref} = +25°C, I_O = 6 A resistive load, V_I = 5 V.

Top trace: output voltage (0.5 V/div). Bottom trace: input voltage (2 V/div). Time scale: 20 ms/div.

Output Ripple & Noise

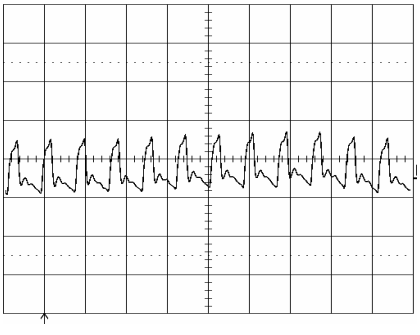

Output voltage ripple (20mV/div) at: T_{ref} = +25°C, I_O = 6 A resistive load, V_I = 5 V. Time scale: 2 µs/div

See the filter in the Output ripple and noise section (EMC Specification).

Output Load Transient Response

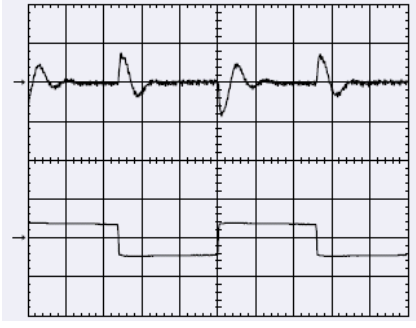

Output voltage response to load current step-change (-2A-2A) at: T_{ref} =+25°C, V_I = 5 V.

Top trace: Vout-Vtrk (50mV/div). Bottom trace: load current (5 A/div). Time scale: 0.1 ms/div.

© Ericsson Power Modules AB

EMC Specification

Conducted EMI measured according to test set-up.
The fundamental switching frequency is 600 kHz for PME 5118VxF @ V_I = 5.0 V, max I_O.

Conducted EMI Input terminal value (typ)

TBD

EMI without filter

TBD

Test set-up

Layout recommendation

The radiated EMI performance of the DC/DC regulator will depend on the PCB layout and ground layer design.
It is also important to consider the stand-off of the DC/DC regulator.
If a ground layer is used, it should be connected to the output of the DC/DC regulator and the equipment ground or chassis.

A ground layer will increase the stray capacitance in the PCB and improve the high frequency EMC performance.

Output ripple and noise

Output ripple and noise measured according to figure below.
See Design Note 022 for detailed information.

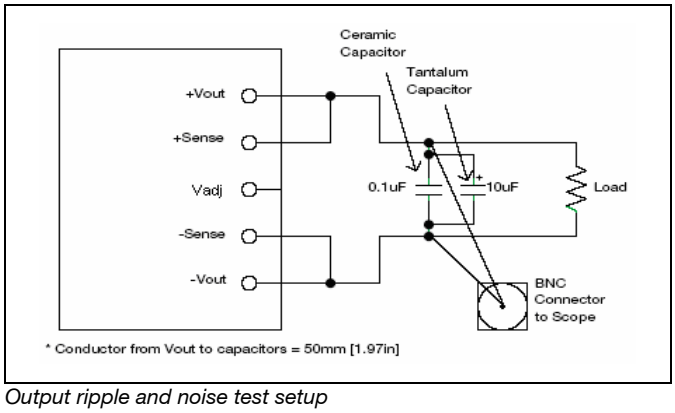

Output ripple and noise test setup

Operating information

Extended information for POLA products is found in Application Note AN206.

Input Voltage

The input voltage range 4.5 to 5.5 Vdc makes the product easy to use in intermediate bus applications when powered by a regulated bus converter.

Turn-off Input Voltage

The DC/DC regulators monitor the input voltage and will turn on and turn off at predetermined levels.
The minimum hysteresis between turn on and turn off input voltage is 0.6V.

Remote Control {Inhibit}

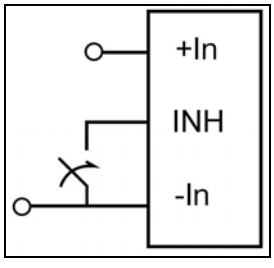

The products are fitted with a remote control (Inhibit) function referenced to the primary negative input connection (- In), positive logic. The INHIBIT function allows the regulator to be turned on/off by an external device like a semiconductor or mechanical switch.

The regulator will turn on when the input voltage is applied with the INH pin open. Turn off is achieved by connecting the INH pin to the - In. To ensure safe turn off the voltage difference between INH pin and the - In pin shall be less than 0.6V. The regulator will restart automatically when this connection is opened.

© Ericsson Power Modules AB

External Capacitors

Input capacitors:
The recommended input capacitors are determined by the 220 µF minimum capacitance and 300 mArms minimum ripple current rating.

Output capacitors (required):
A 470 µF low-ESR electrolytic output capacitance Is required to meet specification as defined in the electrical specification.

Output capacitors (optional):
The recommended output capacitance of 200 µF ceramic capacitor will allow the module to meet its transient response specification as defined in the electrical specification.

When using one or more non-ceramic capacitors, the calculated equivalent ESR should be no lower than 4 mΩ (Use 7 mΩ as the minimum when using max-ESR values to calculate).

Input And Output Impedance

The impedance of both the input source and the load will interact with the impedance of the DC/DC regulator. It is important that the input source has low characteristic impedance. The regulators are designed for stable operation without external capacitors connected to the input or output. The performance in some applications can be enhanced by addition of external capacitance as described under External Decoupling Capacitors. If the input voltage source contains significant inductance, the addition of a 100 µF capacitor across the input of the regulator will ensure stable operation. The capacitor is not required when powering the DC/DC regulator from an input source with an inductance below 10 µH.

External Decoupling Capacitors

When powering loads with significant dynamic current requirements, the voltage regulation at the point of load can be improved by addition of decoupling capacitors at the load. The most effective technique is to locate low ESR ceramic and electrolytic capacitors as close to the load as possible, using several parallel capacitors to lower the effective ESR. The ceramic capacitors will handle high-frequency dynamic load changes while the electrolytic capacitors are used to handle low frequency dynamic load changes. Ceramic capacitors will also reduce any high frequency noise at the load.
It is equally important to use low resistance and low inductance PCB layouts and cabling.
External decoupling capacitors will become part of the control loop of the DC/DC regulator and may affect the stability margins. As a “rule of thumb”, 100 µF/A of output current can be added without any additional analysis. The ESR of the capacitors is a very important parameter. Power Modules guarantee stable operation with a verified ESR value of >10 mΩ across the output connections.
For further information please contact your local Ericsson Power Modules representative.

Over Current Protection (OCP)

The regulators include current limiting circuitry for protection at continuous overload.

The output voltage will decrease towards zero for output currents in excess of current limit threshold. The regulator will resume normal operation after removal of the overload. The load distribution should be designed for the maximum output short circuit current specified. The current limit operation is a “hick up” mode.

Generation of the BusTermination Voltage

The voltage at V_{REF} is the reference voltage for the system bus receiver comparators. It is normally set to precisely half the bus driver supply voltage (VDDQ/2), using a resistor divider. The Thevenin impedance of the network driving the VREF pin should not exceed 500 ohm

The module senses V_{REF} to regulate the output voltage V_{TT}, the required bus termination supply voltage. V_{TT} is active about 20 ms after a valid V_{REF} input source is applied to the module. Once active V_{TT} will track the voltage applied at V_{REF}.

© Ericsson Power Modules AB

Thermal Consideration

General

The regulators are designed to operate in different thermal environments and sufficient cooling must be provided to ensure reliable operation.
Cooling is achieved mainly by conduction, from the pins to the host board, and convection, which is dependant on the airflow across the regulator. Increased airflow enhances the cooling of the regulator.

The Output Current Derating graph found in the Output section for each model provides the available output current vs. ambient air temperature and air velocity at V_{in} = 5 V.

The DC/DC regulator is tested on a 254 x 254 mm, 35 µm (1 oz), 8-layer test board mounted vertically in a wind tunnel with a cross-section of 305 x 305 mm.

Proper cooling of the DC/DC regulator can be verified by measuring the temperature at positions P1, P2 and P3. The temperature at these positions should not exceed the max values provided in the table below.

Note that the max value is the absolute maximum rating (non destruction) and that the electrical Output data is guaranteed up to T_{ref} +85°C.

See Design Note 019 for further information.

Position	Device	Designation	max value
P_1	PCB		110° C
P_2	MOSFET	T_{ref}	120° C
P_3	INDUCTOR		120° C

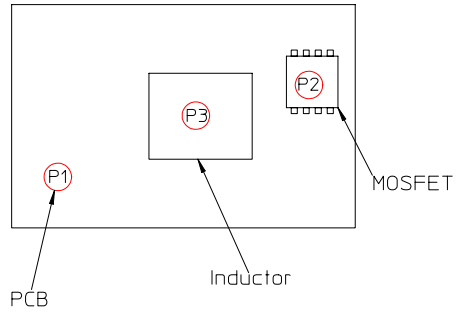

Thermal Consideration continued

Definition of reference temperature (T_{ref})

The reference temperature is used to monitor the temperature limits of the product. Temperatures above maximum T_{ref} are not allowed and may cause degradation or permanent damage to the product. T_{ref} is also used to define the temperature range for normal operating conditions.
T_{ref} is defined by the design and used to guarantee safety margins, proper operation and high reliability of the module.

Ambient Temperature Calculation

TBD

Connections

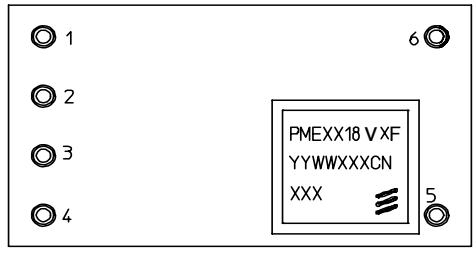

TOP VIEW

Pin	Designation	Function
1	GND	Common ground connection for the V_{in} and V_{TT} power connections
2	V_{REF}	reference voltage for the system bus receiver comparators
3	V_{IN}	The positive input voltage power node to the module.
4	Inhibit	Applying a low-level ground signal to this input disables the module's output.
5	No Connect	
6	V_{TT}	Regulated power output with respect to the GND node and required bus termination supply voltage.

© Ericsson Power Modules AB

Mechanical Information (Surface mount version)

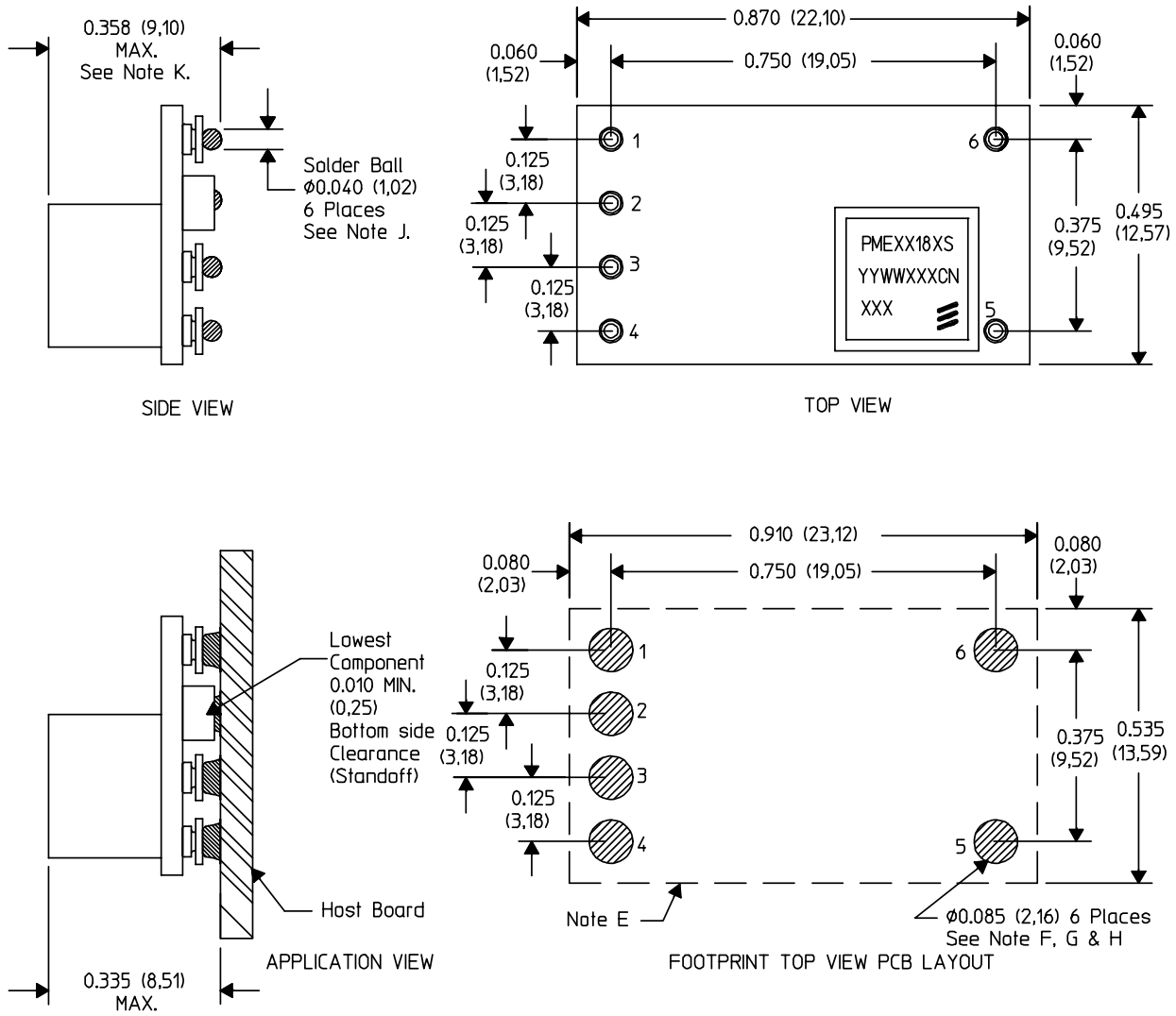

NOTES:
A. All linear dimensions are in inches (mm).
B. This drawing is subject to change without notice.
C. 2 place decimals are ±0.030 (±0,76mm).
D. 3 place decimals are ±0.010 (±0,25mm).
E. Recommended keep out area for user components.
F. Power pin connection should utilize two or more vias to the interior power plane of 0.025 (0,63) I.D. per input, ground and output pin (or the electrical equivalent).
G. Paste screen opening: 0.080 (2,03) to 0.085 (2,16). Paste screen thickness: 0.006 (0,15).
H. Pad type: Solder mask defined.
J. All pins: Material - Copper Alloy
Plating - 10µm Tin over 4µm Nickel
Solder Ball - See product data sheet.
K. Dimension prior to reflow solder.

MECHANICAL DATA FOR THE PME DC/DC REGULATOR

Weight: 2,9 g

Use recommended footprint and solder recommendations together with solder reflow recommendations to ensure a reliable interconnection.

© Ericsson Power Modules AB

Mechanical Information (Through hole mount version)

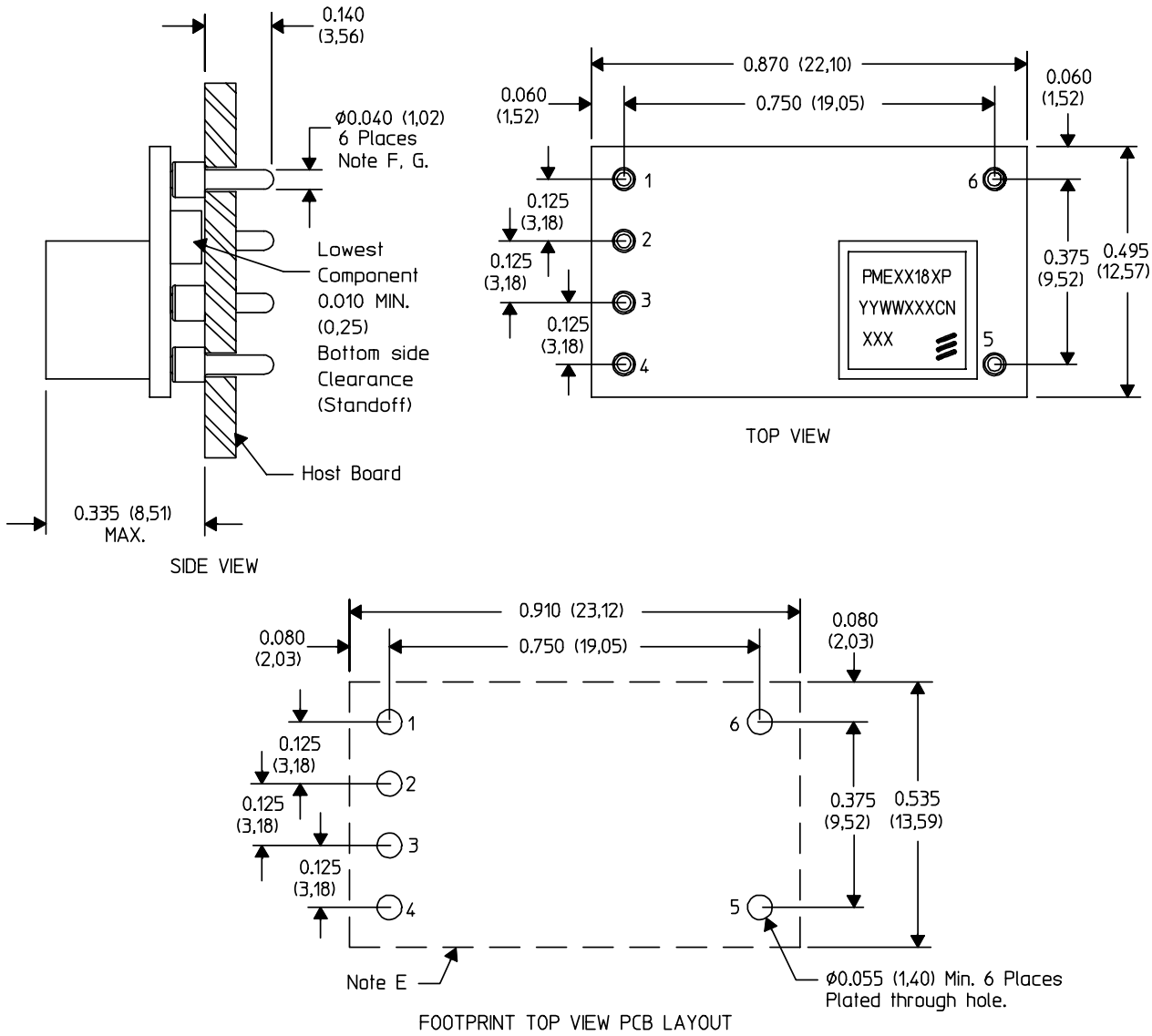

NOTES:
A. All linear dimensions are in inches (mm).
B. This drawing is subject to change without notice.
C. 2 place decimals are ±0.030 (±0,76mm).
D. 3 place decimals are ±0.010 (±0,25mm).
E. Recommended keep out area for user components.
F. Pins are 0.040" (1,02) diameter with 0.070" (1,78) diameter standoff shoulder.
G. All pins: Material - Copper Alloy
Plating - 10µm Tin over 4µm Nickel

MECHANICAL DATA FOR THE PME DC/DC REGULATOR

Weight: 2,6 g

Use recommended footprint and solder recommendations together with solder reflow recommendations to ensure a reliable interconnection.

© Ericsson Power Modules AB

Soldering Information - Surface mounting

The surface mount version of the product is intended for convection or vapor phase reflow Pb-free processes. To achieve a good and reliable soldering result, make sure to follow the recommendations from the solder paste supplier, to use state-of-the-art reflow equipment and reflow profiling techniques as well as the following guidelines.

A no-clean flux is recommended to avoid entrapment of cleaning fluids in cavities inside of the DC/DC regulator. The cleaning residues may affect long time reliability and isolation voltage.

Minimum pin temperature recommendations

Pin number 5 is chosen as reference location for the minimum pin temperature recommendations since this will be the coolest solder joint during the reflow process.

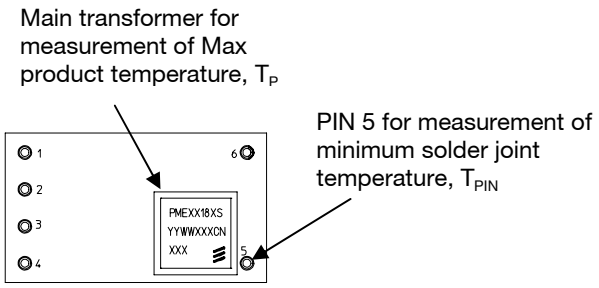

SnPb solder processes

For Pb solder processes, a pin temperature (T_{PIN}) in excess of the solder melting temperature, (T_L, +183 °C for Sn63/Pb37) for more than 30 seconds, and a peak temperature of +210 °C is recommended to ensure a reliable solder joint.

Lead-free (Pb-free) solder processes

For Pb-free solder processes, a pin temperature (T_{PIN}) in excess of the solder melting temperature (T_L, +217 to +221 °C for Sn/Ag/Cu solder alloys) for more than 30 seconds, and a peak temperature of +235 °C on all solder joints is recommended to ensure a reliable solder joint.

Maximum regulator temperature requirements

To avoid damage or performance degradation of the product, the reflow profile should be optimized to avoid excessive heating. The maximum product temperature shall be monitored by attaching a thermocoupler to the top of the main transformer.

A sufficiently extended preheat time is recommended to ensure an even temperature across the host PCB, for both small and large devices. To reduce the risk of excessive heating is also recommended to reduce the time in the reflow zone as much as possible.

SnPb solder processes(PENDING)

For conventional SnPb solder processes, the product is qualified for MSL 1 according to IPC/JEDEC standard J-STD-020C.

During reflow, T_P must not exceed +225 °C at any time.

Lead-free (Pb-free) solder processes

For Pb-free solder processes, the product is qualified for MSL 3 according to IPC/JEDEC standard J-STD-020C.

During reflow, T_P must not exceed +260 °C at any time.

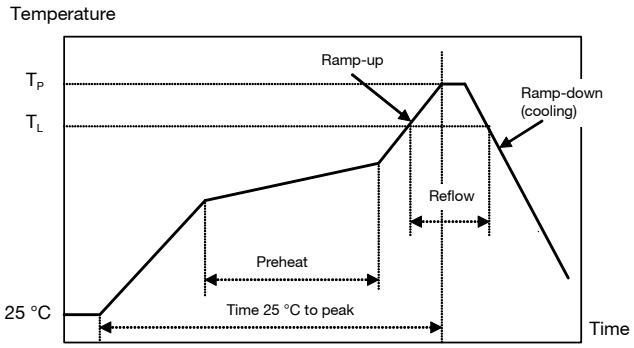

Profile features		Sn/Pb eutectic assembly	Pb-free assembly
Average ramp-up rate		3 °C/s max	3 °C/s max
Solder melting temperature (typical)	T_L	+183 °C	+221 °C
Peak product temperature	T_P	+225 °C	+260 °C
Average ramp-down rate		6 °C/s max	6 °C/s max
Time 25 °C to peak temperature		6 minutes max	8 minutes max

© Ericsson Power Modules AB

Soldering Information – Through Hole Mounting

The through hole mount version of the product is intended for through hole mounting in a PCB. When wave soldering is used, the temperature on the pins is specified to maximum 260 °C for maximum 10 seconds.

Maximum preheat rate of 4 °C/s and temperature of max 150 °C is suggested. When hand soldering, care should be taken to avoid direct contact between the hot soldering iron tip and the pins for more than a few seconds in order to prevent overheating.

A no-clean (NC) flux is recommended to avoid entrapment of cleaning fluids in cavities inside of the DC/DC power module. The residues may affect long time reliability and isolation voltage.

© Ericsson Power Modules AB

Delivery package information for SMD

The products are delivered in antistatic trays (JEDEC standard) or in antistatic carrier tape (EIA standard).

Tray specifications	
Material	PET
Surface resistance	10E3 to 10E5 ohms/square
Bake ability	The trays can not be baked.
Tray capacity	56 products /tray
Box capacity	280 products/box
Weight	250 g/full tray

Carrier tape specifications	
Material	Polystyrene
Surface resistance	< 10E5 ohms/square
Bake ability	The tape can not be baked.
Tape width	44 mm [1.732 inch]
Pocket pitch	24 mm [0.945 inch]
Pocket depth	9.1 mm [0.358 inch]
Reel diameter	380 mm [15 inch]
Reel capacity	250 products /reel
Box capacity	250 products (1 reels/box)
Weight	1.1 kg/full reel

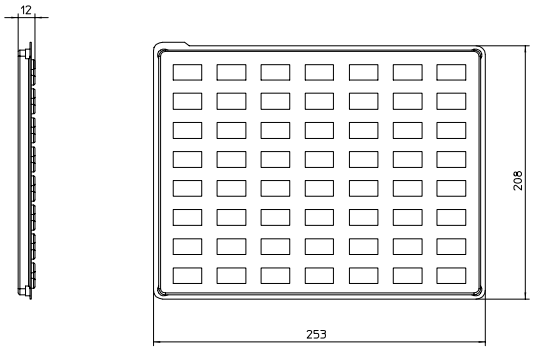

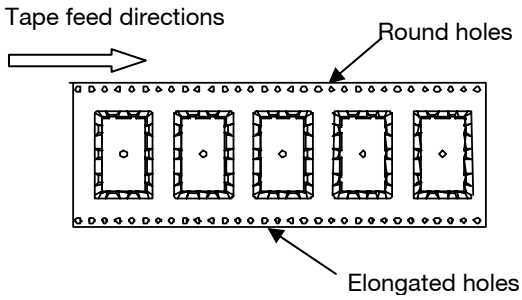

Dry pack information

The products are delivered in trays or tape & reel. These inner shipment containers are dry packed in standard moisture barrier bags according to IPC/JEDEC standard J-STD-033A (Handling, packing, shipping and use of moisture/reflow sensitivity surface mount devices).

Using products in high temperature Pb-free soldering processes requires dry pack storage and handling. In case the products have been stored in an uncontrolled environment and no longer can be considered dry, the modules must be baked according to the referred IPC/JEDEC standard.

© Ericsson Power Modules AB

Product Qualification Specification

Characteristics			
Visual inspection	JESD22-B101		
Temperature cycling	JESD22-A104-B	Dwell time Transfer time Temperature range Number of cycles	30 min 0-1 min -40 °C to +125 °C 300 cycles
High temperature storage life	JESD22-A103-B	Temperature Duration	125 °C 1000 h
Cold (in operation)	IEC 68-2-1, test Ad	Temperature T_A Duration	-45 °C 72 h
Lead integrity	JESD22-B105-C	Test condition A Weight Duration	 1000 g 30 s
Solder ability(only apply to through hole version)	IEC 68-2-54	Solder immersion depth Duration of immersion (F_C time) T_A (time for onset of wetting) Time to F_B Wetting Strength F_B Stability F_C/F_B	1 mm 15 s <4 s 8 s >100 mN/m >0.8
Steady State Temperature Humidity Bias Life Test	JESD22-A101-B	Temperature Humidity Duration Input Voltage	+85 °C 85 % RH 1000 hours Maximum
Mechanical shock	JESD22-B104-B	Peak acceleration Duration Number of shocks	200 g 1.5 ms 5 in each of two directions of three axes
Vibration, variable freq	JESD22-B103-B	Frequency range Acceleration amplitude	10-1000 Hz 10 g or displacement amplitude 1.0 mm
Random vibration	JESD22-B103-B	Frequency Acceleration density	2-500 Hz 0.008-0.2 g^2/Hz
Operational life test		Temperature Load ON OFF Test duration	85 °C Maximum 9 min 3 min 1000 h
Moisture reflow sensitivity classification test	J-STD-020C	SnPb eutectic MSL 1	225 °C
		Pb free MSL 3	260 °C
Resistance to cleaning agents	IEC 68-2-45 Xa Method 2	Water Glycol ether Isopropyl alcohol	+55 ±5 °C +35 ±5 °C +35 ±5 °C