DC/DC power module 3.3V and 5V /2A/15W

- SMD and through-hole versions with ultra low component height 8.0 mm (0.315 in.)
- 87% efficiency at full load
- 1,500 Vdc isolation voltage
- MTTF > 8 million hours at +50°C case temperature
- Low EMI
- Wide output trim

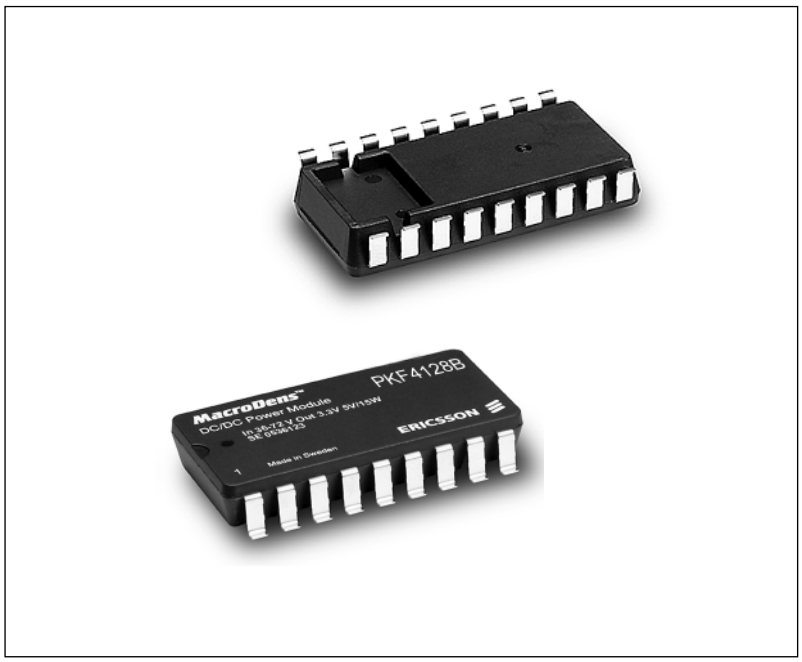

The MacroDens™ 15W PKF 4128B SI series true component level on-board DC/DC power modules are intended as distributed power sources in decentralized –48 and –60VDC power systems. They are optimized for an operational ambient temperature range in compliance with present and future application needs, including non temperature controlled environments.

The mechanical design offers the choice of surface mount or through-hole versions, delivered in ready to-use tubes, trays or tape & reel package, and compatibility with semi and fully aqueous cleaning processes. For mechanical and other information please refer to the PKF series General information data sheet.

ERICSSON

Absolute Maximum Ratings

Characteristics		min	max	Unit
T_C	Case temperature at full output power	-45	+100	°C
T_S	Storage temperature	-55	+125	°C
V_I	Continuous input voltage1)	-0.5	+85	Vdc
V_{ISO}	Isolation voltage (input to output test voltage)	1,500		Vdc
E_{tr}	Transient input energy		0.1	Ws
V_{RC}	Remote control voltage pin 10,11 ref. to pin 17	-5	+16	Vdc
V_{adj}	Output adjust voltage pin 8,9 ref. to pin 17	-5	+40	Vdc

Stress in excess of Absolute Maximum Ratings may cause permanent damage. Absolute Maximum Ratings, sometimes referred to as no destruction limits, are normally tested with one parameter at a time exceeding the limits of Output data or Electrical Characteristics. If exposed to stress above these limits, function and performance may degrade in an unspecified manner.

Input $T_C < T_{Cmax}$ unless otherwise specified

Characteristics		Conditions	min	typ	max	Unit
V_I	Input voltage range1)2)		36		75	V
V_{Ioff}	Turn-off input voltage	See typical characteristics	30.0	33.5	35.0	V
V_{Ion}	Turn-on input voltage	See typical characteristics	32.0	34.5	36.0	V
C_I	Input capacitance			2		μF
P_{li}	Input idling power	I_O= 0, T_C=–30…+95°C	(V_I=53V)	720		mW
P_{RC}	Input stand-by power	T_C=–30…+95°C, RC connected to pin 17	(V_I=53V)	40		mW

Notes:

1) The input voltage range 36…75 Vdc meets the European Telecom Standard prETS 300 132-2 Nominal input voltage range in 48 V and 60 Vdc power systems, –40.5…–57.0 V and –50.0…–72.0 V respectively. Absolute max continuous input voltage is 80 Vdc.

2) The power module will operate down to ≤ 35V, when V_I decreases, but will turn on to at VI ≤ 36V, when V_I increases (see also Operating information).

Connections

Pin	Designation	Function
1	Out 1	Output 1(+).
2	Rtn	Output return.
3-6	NC	Not connected. Galvanically Isolated from input pins.
7	RC	Remote control.
8	V_{adj}	Output voltage adjust.
9	NOR	Connection of Nominal Output voltage Resistor.
10	+In	Positive Input.
11	–In	Negative input.
12–16	NC	Not connected. Galvanically isolated from input pins.
17	Rtn	Output return.
18	Out 2	Output 2(+).

Note: Galvanic isolation is verified in an electric strenght test. Test voltage is 1.500 Vdc for 60s. In production the test duration may be decreased to 1 s.

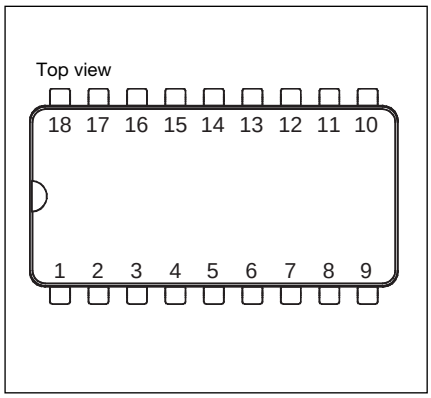

For detailed mechanical information see PKF general datasheet

EN/LZT 146 089 R1A ©Ericsson Power Modules AB, March 2005

Safety

The PKF 4128B SI DC/DC power module meets the requirements of
UL/EN 60 950, *Safety of information technology equipment including electrical business equipment*. The PKF power modules are recognized by UL and meet the applicable requirements in UL 1950 *Safety of information technology equipment*, the applicable Canadian safety requirements and UL 1012 *Standard for power supplies*.
The DC/DC power module shall be installed in an end-use equipment and considerations should be given to measuring the case temperature to comply with T_{Cmax} when in operation.
Abnormal component tests are conducted with the input protected by an external 15 A fuse. The need for repeating these tests in the end-use appliance shall be considered if installed in a circuit having higher rated devices.
When the supply to the DC/DC power module meets all the requirements for SELV (<60Vdc), the output is considered to remain within SELV limits (level 3). The isolation is an operational insulation in accordance with EN 60950.
The DC/DC power module is intended to be supplied by isolated secondary circuitry and shall be installed in compliance with the requirements of the ultimate application. If they are connected to
a 60 V DC system reinforced insulation must be provided in the power supply that isolates the input from the mains. Single fault testing in the power supply must be performed in combination with the DC/DC power module to demonstrate that the output meets the requirement for SELV. One pole of the input and one pole of the output is to be grounded or both are to be kept floating. The terminal pins are only intended for connection to mating connectors of internal wiring inside the end-use equipment.
These DC/DC power modules may be used in telephone equipment in accordance with paragraph 34 A.1 of UL 1459 (Standard for Telephone Equipment, second edition).
The galvanic isolation is verified in an electric strength test. Test voltage (V_{ISO}) between input and output is 1,500 Vdc for 60 s. In production the test duration may be decreased to 1 s. The capacitor between input and output has a value of 1nF and the leakage current is less than 1µA @ 53 Vdc.
The case is designed in non-conductive epoxy. Its flammability rating meets UL 94V-0. The oxygen index is 34%.

Electrical Data

Fundamental circuit diagram, Dual output

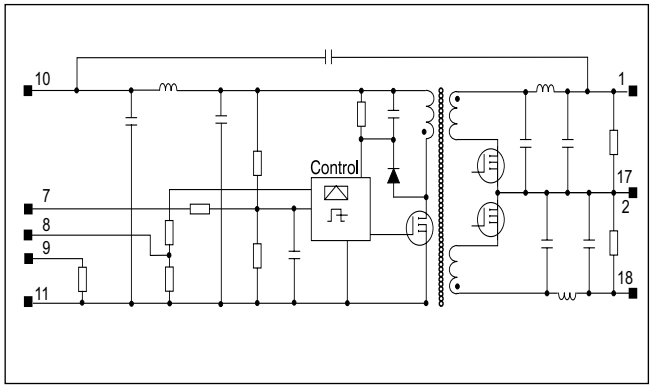

Transient input voltage

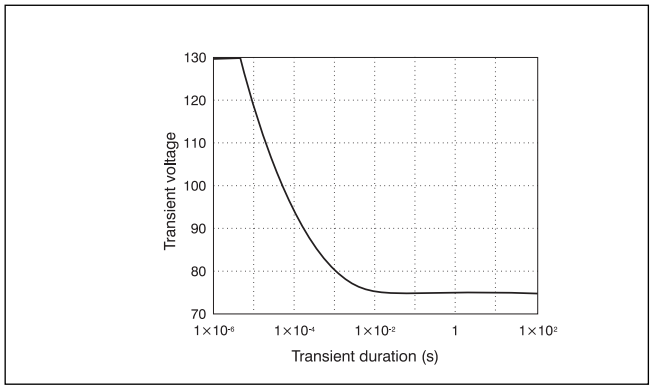

Single voltage pulse at +25°C ambient temperature.

Output

T_C = –30…+95 °C, V_I = 36...75 V, I_{O1} = 1.5 A, I_{O2}= 1.4 A unless otherwise specified.

Characteristics		Conditions		Output 1			Output 2			Unit
				Min	Typ	Max	Min	Typ	Max	
V_{Oi}	Output voltage initial setting and accuracy	T_C = +25°C, V_I = 53V			3.3			5.0		V
	Output adjust range [1]			3.06		3.47	4.63		5.28	
V_O	Output voltage tolerance band	Long term drift included	I_{O1} = 0.15-1.5A I_{O2} = 0.14-1.4A	3.17		3.43	4.8		5.2	V
	Idling voltage	I_{O1} = I_{O2} = 0A		3.13		3.47	4.75		5.25	
	Line regulation	I_{O1} = 1.5A I_{O2} = 1.4A	V_I = 36 ... 75V		6			11		mV
	Load regulation	Simultaneously, V_I = 53V	I_{O1} = 0.15 ... 1.5A I_{O2} = 0.14 ... 1.4A		42			55		mV
t_{tr}	Load transient recovery time	I_{O1} = 1.5A I_{O2} = 1.4A V_I=53V, load step = 0.25A - 0.75A			50			50		µs
V_{tr}	Load transient voltage				+200			+300		mV
					-200			-400		
t_r	Ramp-up time	I_O=0.1 ... 1.0 $I_{O\,max}$, 0.1 ... 0.9 V_o, V_I = 53V			2			2		ms
t_s	Start-up time	I_O=0.1 ... 1.0 $I_{O\,max}$, 53V to 0.9 V_O			6			6		
I_O	Output current			0		2	0		2	A
$P_{O\,max}$	Max output power [2]	Calculated value		15						W
I_{lim}	Current limiting threshold [3]	$T_C < T_{C\,max}$, V_{O1} = 3.0V, V_{O2} = 4.5V		2.02	2.5		2.02	2.3		A
I_{sc}	Short circuit current	V_O = 0.2 ... 0.5V, T_C = +25°C			6	7		4	5	A
$V_{O\,ac}$	Output ripple & noise	20Hz … 5MHz			20			30		mV_{p-p}
SVR	Supply Voltage Rejection (ac)	f = 100 Hz sine wave, 1 V_{p-p}, V_I = 53 V (SVR = 20 log (1 V_{p-p}/V_{Op-p}))			72			72		dB

[1] See also Operating Information.
[2] See Typical Characteristics.
[3] I_{lim} on each output is set by the total load.

Miscellaneous

Characteristics		Conditions		min	typ	max	Unit
η	Efficiency		V_I = 53V	81	87		%
P_d	Power dissipation		V_I = 53V		3.6		W
fo	Operating frequency				305		kHz

EN/LZT 146 089 R1A ©Ericsson Power Modules AB, March 2005

Typical Characteristics

Efficiency (typ) @ T_A = +25°C

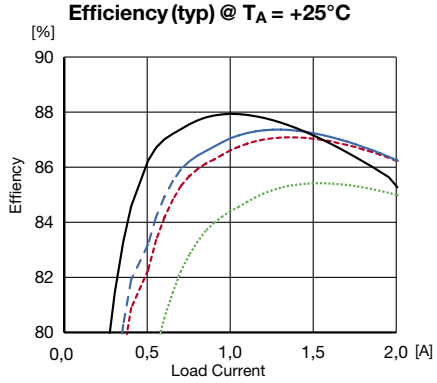

Power derating

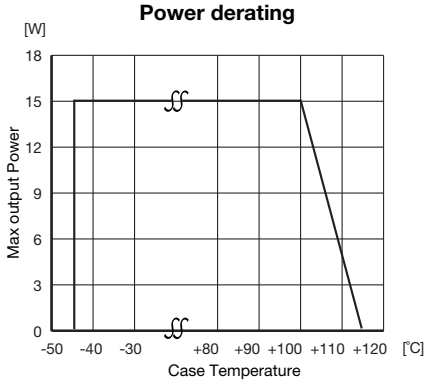

Cross regulation

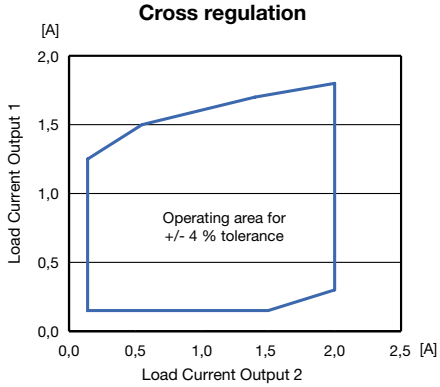

Output Characteristic output 1

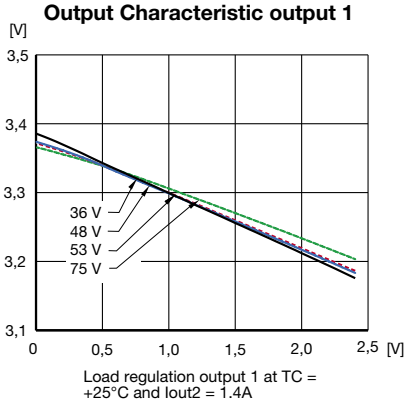

Output Characteristic output 2

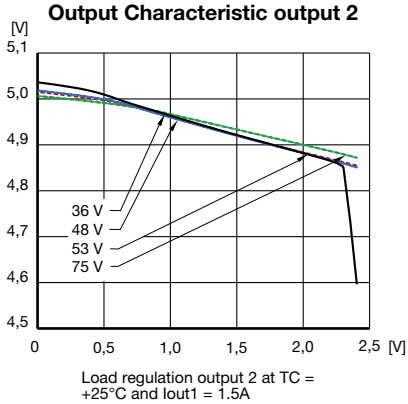

Temperature coefficient

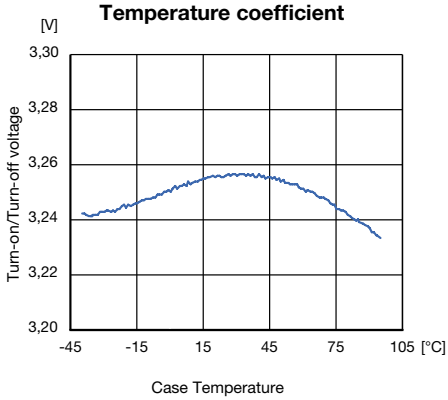

EMC Specifications

The PKF power module is mounted on a double sided Printed circuit Board (PB) with ground plane during EMC measurements. The fundamental switching frequency is 305 kHz ±5% @ $I_O = (0.1 \ldots 1.0) \times I_{Omax}$.

External Filter (class B) example

External input filter in order to meet class B in EN 55022, CISPR 22 and FCC part 15J.

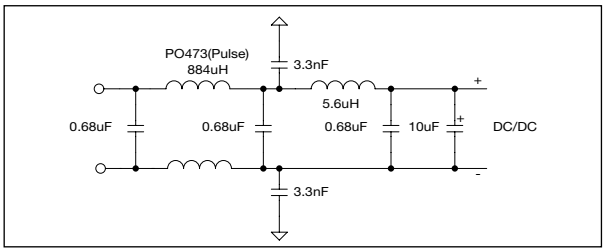

Conducted EMI (input teminals)

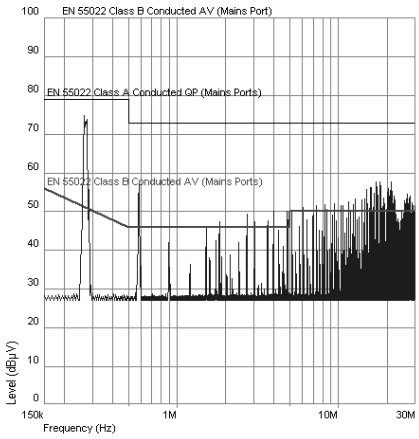

PKF 4128B SI without filter.

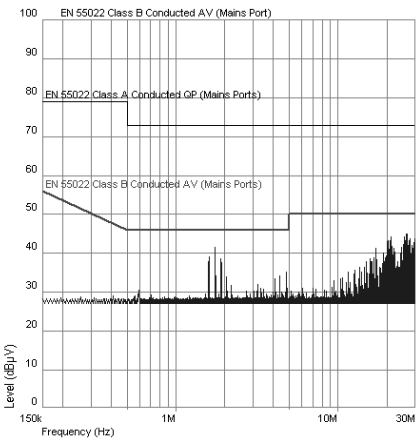

PKF 4128B SI with filter.

Radiated EMS (Electro-Magnetic Fields)

Radiated EMS is measured according to test methods in IEC Standard publ. 801-3. No deviation outside the V_O tolerance band will occur under the following conditions:

Frequency range	Voltage level
0.01...200 MHz	3 V_{rms}/m
200...1,000 MHz	3 V_{rms}/m
1...12 GHz	10 V_{rms}/m

Conducted EMS

Electro Magnetic Susceptibility is measured by injection of electrical disturbances on the input terminals. No deviation outside the V_O tolerance band will occur under the following conditions:

Frequency range	Voltage level
30...300 MHz	1.0 V_{rms}

The signal is amplitude modulated with 1 kHz/80% and applied in both differential and common mode.

ESD

Electro Static Discharge is tested according to IEC publ. 801-2. No destruction will occur if the following voltage levels are applied to any of the terminal pins:

Test	Voltage level
Air discharge	±4 kV
Contact discharge	±2 kV

EFT

Electrical Fast Transients on the input terminals could affect the output voltage regulation causing functional errors on the Printed Board Assembly (PBA). The PKF power modules withstand EFT levels of 0.5 kV keeping V_O within the tolerance band and
2.0 kV without destruction. Tested according to IEC publ. 801-4.

Output Ripple & Noise ($V_O$ac)

Output ripple is measured as the peak to peak voltage of the fundamental switching frequency.

Operating Information

Fuse Considerations

To prevent excessive current from flowing through the input supply line, in the case of a short-circuit across the converter input, an external fuse should be installed in the non-earthed input supply line. We recommend using a fuse rated at approximately 2 to 4 times the value calculated in the formula below:

$$I_{in\,max} = \frac{P_{O\,max}}{(\eta_{min} \times V_{I\,min})}$$

Refer to the fuse manufacturer for further information.

Remote Control (RC)

Turn-on or turn-off can be realized by using the RC-pin. If pin 7 is connected to pin 11 the power modules turns off. Normal operation is achieved if pin 7 is open (NC). To ensure safe turn-off the voltage difference between pin 7 and 11 shall be less than 1.0 V. RC is an open collector compatible input. A sink capacity of 1mA is needed. (see fig. 1).

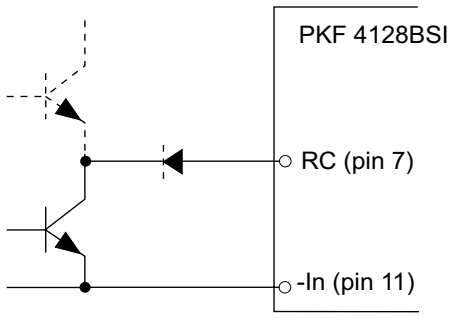

Figure 1

Output Voltage Adjust (V_{adj})

Output voltage, V_O, can be adjusted by using an external resistor or other external circuitry. If other circuitry is used, the slew rate has to be limited to maximum 5 V/ms. To increase V_O a resistor should be connected between pin 8/9 and 11, and to decrease V_O a resistor should be connected between pin 8 and 9 (see fig. 3).

To increase output voltage:

$$R_{ounom} = 4.14 \times (1.28 \times V_{oi} - V_{od})/(V_{od} - V_{oi})\ k\Omega$$

V_i is the initial output voltage when pin 8 and 9 are connected, V_o is the desired output voltage.

To decrease output voltage:

$$I_{adj} = 943 \times (1 - (V_{od}/V_{oi}))\ \mu A$$

V_i is the initial output voltage when pin 8 and 9 are connected, V_o is the desired output voltage.

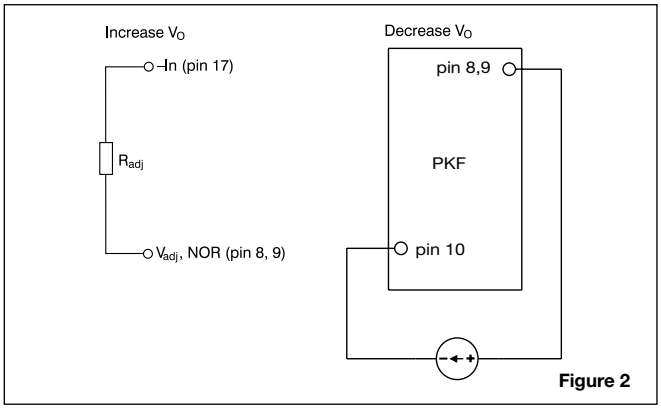

Figure 2

Current Limiting Protection (I_{lim})

The output power is limited at loads above the output current limiting threshold (I_{lim}), specified as a minimum value.

Capacitive Load

The PKF series has no maximum limit for capacitive load on the output. The power module may operate in current limiting mode during start-up, affecting the ramp-up and the start-up time. For optimum start performance we recommend maximum 100 µF/A of I_O. Connect capacitors at the point of load for best performance.

Input and Output Impedance

Both the source impedance of the power feeding and the load impedance will interact with the impedance of the DC/DC power module.
Due to the low energy storage capability of the power module, it is very important to maintain a low characteristic impedance at the input and output of the module i.e. a low ratio between L and C.
Use an electrolytic capacitor across the input if the source inductance is higher than 10 µH. Their equivalent series resistance together with the capacitance acts as a lossless damping filter. Suitable capacitor values are in the range 10–100 µF.

Synchronization (Sync)

It is possible to synchronize the switching frequency to an external symmetrical clock signal. The input can be driven by an TTL-compatible output and referenced to the input pin 11.

Characteristics	min	typ	max	Unit
High level	2.2		6.5	V
Threshold level*)	1.2	1.7	2.2	V
Low level	0		0.4	V
Sink current			1.5	mA
Sync. frequency	520		688	kHz

*) Rise time <10ns

Parallel Operation

Paralleling of several converters is easily accomplished by direct connection of the output voltage terminal pins. The load regulation characteristic is specifically designed for optimum paralleling performance. Load sharing between converters will be within ±10%. It is recommended not to exceed $P_O = n \times 0.9 \times P_{Omax}$, where P_{Omax} is the maximum converter output power and n the number of paralleled converters, to prevent overloading any of the converters and thereby decreasing the reliability performance.

Ordering Information

Version	Part No.
Surface mount	4128B SI

Sales Offices and Contact Information

Company Headquarters
Ericsson Power Modules AB
LM Ericssons väg 30
SE-126 25 Stockholm
Sweden

Phone: +46-8-568-69620
Fax: +46-8-568-69599

China
Ericsson Simtek Electronics Co.
33 Fuhua Road
Jiading District
Shanghai 201 818
China

Phone: +86-21-5951-6258
Fax: +86-21-5951-6188

France, Switzerland, Benelux
Ericsson Power Modules AB
Bat Sologne
17 Rue des 4 vents
92380 Garches
France

Phone: +33-1-4741-5244
Fax: +33-1-4741-5244

Germany, Austria
Ericsson Power Modules AB
Mühlhauser Weg 18
85737 Ismaning
Germany

Phone: +49-89-9500-6905
Fax: +49-89-9500-6911

Hong Kong (Asia Pacific)
Ericsson Ltd.
12/F. Devon House
979 King's Road
Quarry Bay
Hong Kong

Phone: +852-2590-2453
Fax: +852-2590-7152

Italy, Spain (Mediterranean)
Ericsson Power Modules AB
Via Cadorna 71
20090 Vimodrone (MI)
Italy

Phone: +39-02-265-946-07
Fax: +39-02-265-946-69

Japan
Ericsson Power Modules AB
Kimura Daini Building, 3 FL.
3-29-7 Minami-Oomachi, Shinagawa-ka
Tokyo 140-0013
Japan

Phone: +81-3-5733-5107
Fax: +81-3-5753-5162

North and South America
Ericsson Inc. Power Modules
6300 Legacy Dr.
Plano, TX 75024
USA

Phone: +1-972-583-5254
+1-972-583-6910
Fax: +1-972-583-7839

UK, Eire
Ericsson Power Modules AB
United Kingdom

Phone: +44-1869-233-992
Fax: +44-1869-232-307

All other countries
Contact Company Headquarters
or visit our website:
www.ericsson.com/powermodules

Information given in this data sheet is believed to be accurate and reliable.
No responsibility is assumed for the consequences of its use nor for any infringement of patents or other rights of third parties which may result from its use.
No license is granted by implication or otherwise under any patent or patent rights of Ericsson Power Modules. These products are sold only according to Ericsson Power Modules' general conditions of sale, unless otherwise confirmed in writing. Specifications subject to change without notice.

EN/LZT 146 089 R1A ©Ericsson Power Modules AB, March 2005