DC/DC converter
Input 18-36 Vdc
Output up to 14A/60W

- Size 74.7x63.5x11.0 mm (2.94x2.50x0.433 in.)
- Efficiency typ 84% at 5 V and full load
- 1500 V dc isolation voltage
- MTBF > 200 years at +75 °C case temperature
- Rugged mechanical design and efficient thermal management, max +100°C case temperature
- EMI measured according to EN 55 022 and FCC part 15J

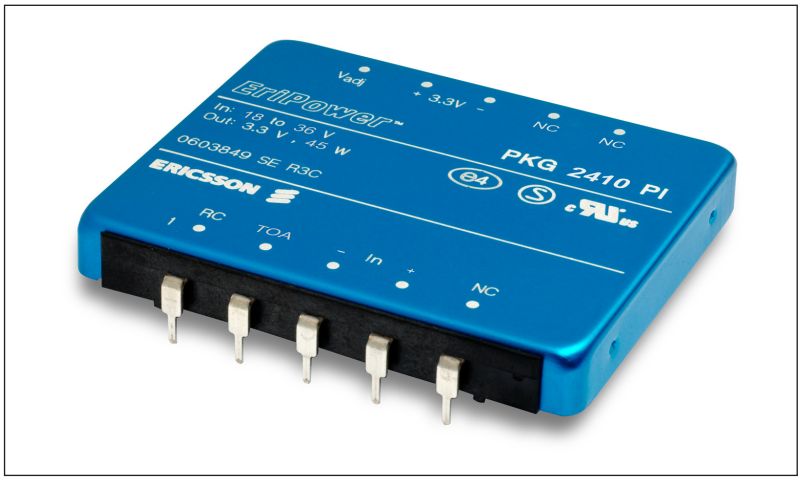

Safety Approvals

Design for Environment

RoHS compatible

Meets requirements in high-temperature lead-free soldering processes.

The PKG 2000 I series of DC/DC converters are intended as distributed power sources in decentralized +24 V DC power systems. They can be used as on-board distributed DC/DC converters, or serve as building blocks for more centralized power boards. The PKG 2000 I series provide up to 60 W in single and dual output versions. The high efficiency makes it possible to operate over a wide temperature range without any extra heat-sinks. At forced convection cooling >200 lfm (1 m/s), the PKG units can deliver full power without heatsinks up to +60°C ambient. With derated output power it can also operate in temperature controlled environments with free convection cooling. By adding external heatsinking, the temperature range can be extended even further. Thanks to their peak power capability, the PKG series is ideal for applications where max power is only required during short durations e.g. in disc drives.
The PKG series use ceramic substrates with plated copper in order to achieve good thermal management. These products are manufactured using highly automated manufacturing lines with a world-class quality levels.
Ericsson Power Modules is an ISO 9001/14001 certified supplier.

General

Absolute Maximum Ratings

Characteristics		min	max	Unit
T_C	Case temperature @ max output power	–45	+100	°C
T_S	Storage temperature	–55	+125	°C
V_I	Input voltage	–0.5	+40	V dc
V_{ISO}	Isolation voltage (input to output test voltage)	1500		V dc
V_{RC}	Remote control voltage pin 1	–10	+10	Vdc
V_{adj}	Output adjust voltage pin 10	–10	+10	Vdc

Stress in excess of Absolute Maximum Ratings may cause permanent damage. Absolute Maximum Ratings, sometimes referred to as no destruction limits, are normally tested with one parameter at a time exceeding the limits of Output data or Electrical Characteristics. If exposed to stress above these limits, function and performance may degrade in an unspecified manner.

Input $T_C < T_C$ max

Characteristics		Conditions	min	typ	max	Unit
V_I	Input voltage range[1)]		18		36	V
V_{Ioff}	Turn-off input voltage	(See Operating Information)		16		V
V_{Ion}	Turn-on input voltage	(See Operating Information)		17		V
r_{Irush}	Equivalent inrush current resistance			10		mΩ
C_I	Input capacitance			3.6		µF
P_{li}	Input idling power	I_O=0,T_C= –30...+90°C		1.0	2.0	W
P_{RC}	Input stand-by current	V_I = 26 V, T_C = +25 °C RC connected to pin 4		1.0		W

Environmental Characteristics

Characteristics	Test procedure & conditions		
Vibration (Sinusoidal)	IEC 68-2-6 F_c	Frequency Amplitude Acceleration Number of cycles	10–500 Hz 0.75 mm 10 g 10 in each axis
Random vibration	IEC 68-2-34 E_d	Frequency Acceleration Spectral density Duration Reproducibility	10...500 Hz 0.5 g^2/Hz 10 min in 3 directions medium (IEC 62-2-36)
Shock (Half sinus)	IEC 68-2-27 E_a	Peak acceleration Shock duration	200 g 3 ms
Temperature change	IEC 68-2-14 N_a	Temperature Number of cycles	–40°C to +125°C 100
Accelerated damp heat	IEC 68-2-3 C_a with bias	Temperature Humidity Duration	85°C 85% RH 1000 hours
Solder resistability	IEC 68-2-20 T_b 1A	Temperature, solder Duration	260°C 10… 13 s
Resistance to cleaning solvents	IEC 68-2-45 XA Method 1	Water Isopropyl alcohol Terpens Method	+55 ±5°C +35 ±5°C +35 ±5°C with rubbing

Safety

The PKG 2000 I Series DC/DC power modules are designed in accordance with EN 60 950, Safety of information technology equipment including electrical business equipment and certified by SEMKO.

The PKG power modules are recognized by UL and meet the applicable requirements in UL 1950 Safety of information technology equipment, the applicable Canadian safety requirements and UL 1012 Standard for power supplies.

The DC/DC power module shall be installed in an end-use equipment and considerations should be given to measuring the case temperature to comply with $T_{C\,max}$ when in operation. They are intended to be supplied by isolated secondary circuitry and shall be installed in compliance with the requirements of the ultimate application. If connected to a 24 V DC power system reinforced insulation must be provided in the power supply that isolates the input from the ac mains. The isolation in the DC/DC power module is an operational insulation in accordance with EN 60 950. One pole of the input and one pole of the output is to be grounded or both are to be kept floating.

The terminal pins are only intended for connection to mating connectors of internal wiring inside the end-use equipment.

The isolation voltage is a galvanic isolation and is verified in an electric strength test. Test voltage (V_{ISO}) between input and output and between case and output is 1500 V dc for 60 s.
In production the test duration may be decreased to 1 s.

The capacitor between input and output has a value of 4.7 nF (duals = 22 nF) and the leakage current is less than 1 µA @ 26 Vdc.

Flammability ratings of the terminal support and internal plastic construction details meets UL 94V-0.

Note:
1) The input voltage range 19...36 V meets the requirements for Normal input voltage range in 24 V DC power systems, 20…30 V. At input voltages exceeding 36V (abnormal voltage) the power loss will be higher than at normal input voltage and T_C must be limited to max +90°C. Absolute max continuous input voltage is 40 Vdc. Output characteristics will be marginally affected at 18V (see also Turn-off Input Voltage).

Mechanical Data

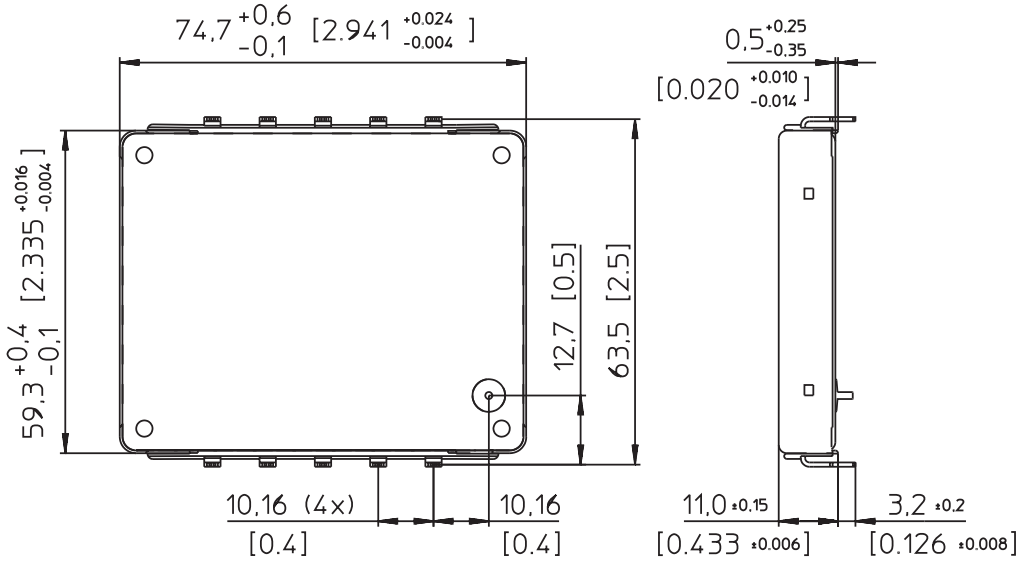

Recommended foot print

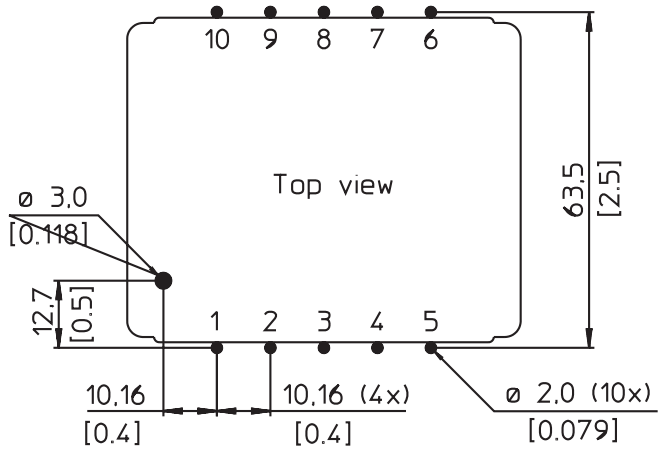

Dimensions in mm (in)

Connections

Pin	Designation	Function
1	RC	Remote control for turn on and turn off.
2	TOA	Turn-on/off input voltage adjust (see Operating information).
3	−In	Negative input. Connected to case.
4	+In	Positive input.
5	NC	Not connected.
6	−Out 2	Negative output 2.
7	+Out 2	Positive output 2.
8	−Out 1	Negative output 1.
9	+Out 1	Positive output 1.
10	V_{adj}	Output voltage adjust.

Weight

Maximum 75 g (2.66 oz).

Case

Blue anodized aluminium casing with embedded palladium plated copper

Thermal Data

Two-parameter model

Power dissipation is generated in the components mounted on the ceramic substrate. The thermal properties of the PKG DC/DC converter is determined by thermal conduction in the connected pins and thermal convection from the substrate via the case.

The two-parameter model characterize the thermal properties of the PKG DC/DC converter and the equation below can be used for thermal design purposes if detailed information is needed. The values are given for a power module mounted on a printed board assembly (PBA).

Note that the thermal resistance between the substrate and the air, $R_{th\ sub\text{-}A}$ is strongly dependent on the air velocity.

$T_{sub} = P_d \times R_{th\ sub\text{-}P} \times R_{th\ sub\text{-}A}/(R_{th\ sub\text{-}P} + R_{th\ sub\text{-}A}) + (T_P - T_A) \times R_{th\ sub\text{-}A}/(R_{th\ sub\text{-}P} + R_{th\ sub\text{-}A}) + T_A$

Where:

P_d : dissipated power, calculated as $P_O \times (1/\eta - 1)$
T_{sub} : max average substrate temperature, $\approx T_{C\,max}$
T_A : ambient air temperature at the lower side of the power module
T_P : average pin temperature at the PB solder joint
$R_{th\ sub\text{-}P}$: thermal resistance from T_{sub} to the pins
$R_{th\ sub\text{-}A}$: thermal resistance from T_{sub} to T_A
v : velocity of ambient air.

Air velocity in free convection is 0.2–0.3 m/s (40-60 lfm).

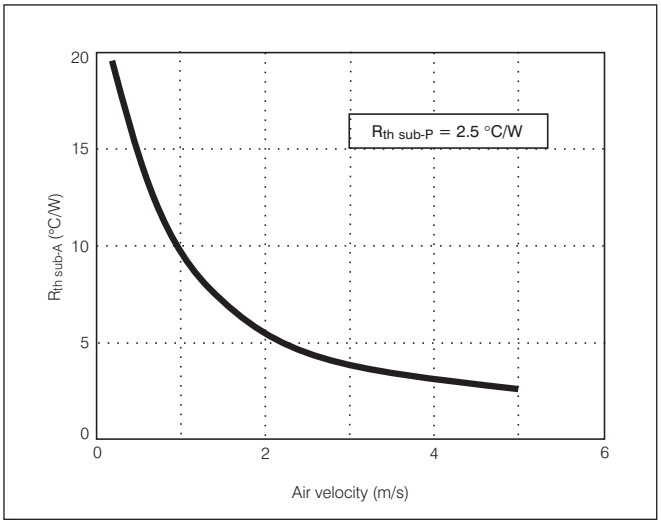

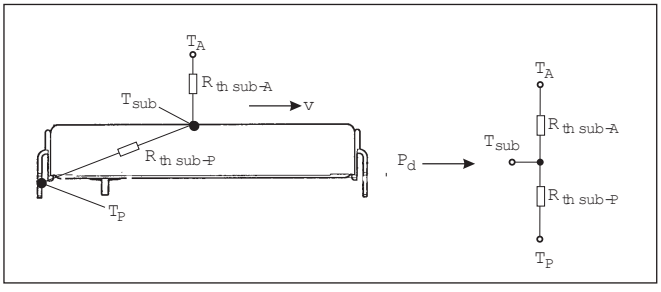

Over TemperatureProtection(OTP)

The PKG DC/DC converters have an internal over temperature protection circuit. If the case temperature exceeds min +115 °C the converter will go in to OTP-mode.

During OTP-mode the DC/DC converter will shut down completely and when the case temperature has decreased 25 °C the converter will automatically restart.

Electrical Data

Fundamental circuitdiagrams

Single output

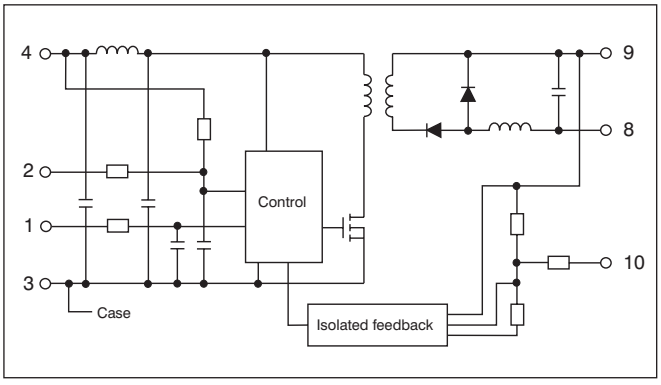

Dual output

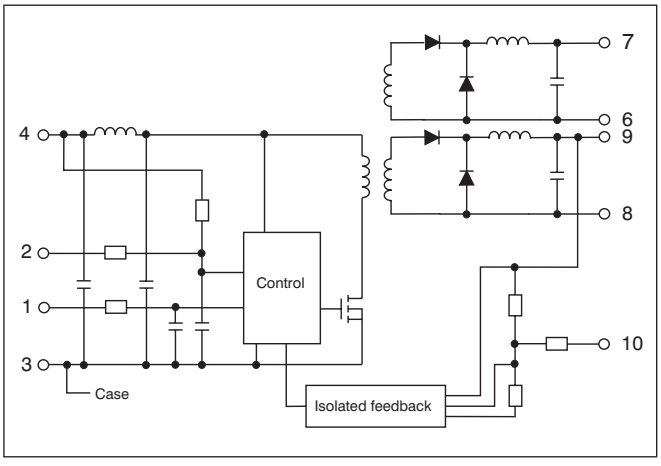

PKG 2410 PI

T_C = –30…+90°C, V_I = 18…36 V unless otherwise specified.

Output

Characteristics		Conditions		Output 1 min	Output 1 typ	Output 1 max	Unit
V_{Oi}	Output voltage initial setting and accuracy	T_C = +25 °C, I_O = $I_{O\,max}$, V_I = 26 V		3.28	3.30	3.32	V
	Output adjust range[1]			2.40		3.65	V
V_O	Output voltage tolerance band	Long term drift included	I_O=0.1…1.0 × $I_{O\,max}$	3.10		3.40	V
	Idling voltage	I_O = 0 A				4.0	V
	Line regulation	I_O=$I_{O\,max}$			10		mV
	Load regulation	I_O=0.1…1.0 × $I_{O\,max}$, V_I = 26 V			35		mV
t_{tr}	Load transient recovery time	I_O=0.1… 1.0 × $I_{O\,max}$, V_I = 26 V load step = 0.5× $I_{O\,max}$			100	150	µs
V_{tr}	Load transient voltage				+200		mV
					–300		mV
T_{coeff}	Temperature coefficient[2]	I_O=$I_{O\,max}$, T_C <$T_{C\,max}$		see PKG 2410 Temperature characteristics			
t_r	Ramp-up time	I_O= 0.1…1.0 × $I_{O\,max}$	0.1…0.9 × V_O		10	15	ms
t_s	Start-up time		From V_I connection to V_O= 0.9 × V_{Oi}		15		ms
I_O	Output current			0		14	A
$P_{O\,max}$	Max output power[3]	Calculated value			46		W
I_{lim}	Current limiting threshold	T_C <$T_{C\,max}$		15.4			A
I_{sc}	Short circuit current	V_O = 0.2… 0.5 V, T_A = 25 °C			18		A
$V_{O\,ac}$	Output ripple & noise	I_O=$I_{O\,max}$	20 Hz…5 MHz		60	100	mV_{p-p}
SVR	Supply voltage rejection (ac)	f = 100 Hz sine wave, 1 V_{p-p}, V_I = 26 V (SVR = 20 log (1 V_{p-p}/V_{Op-p}))		45			dB
OVP	Over voltage protection	I_O > 0.1 × $I_{O\,max}$			4		V

1) See Operating information.
2) Temperature coefficient is positive at low temperatures and negative at high temperatures.
3) See also Typical Characteristics, Power derating.

Miscellaneous

Characteristics		Conditions	min	typ	max	Unit
η	Efficiency	I_O= $I_{O\,max}$, V_I = 26 V		79		%
P_d	Power dissipation	I_O= $I_{O\,max}$, V_I = 26 V		12		W

PKG 2611 PI

T_C = –30…+90°C, V_I = 18…36 V unless otherwise specified.

Output

Characteristics		Conditions		Output 1 min	Output 1 typ	Output 1 max	Unit
V_{Oi}	Output voltage initial setting and accuracy	T_C = +25°C, I_O = I_{Omax}, V_I = 26 V		5.12	5.15	5.18	V
	Output adjust range[1]			4.60		5.60	V
V_O	Output voltage tolerance band	Long term drift included	I_O=0.1…1.0 × I_{Omax}	5.05		5.25	V
	Idling voltage	I_O = 0 A				5.80	V
	Line regulation	I_O=I_{Omax}			5		mV
	Load regulation	I_O=0.1…1.0 × I_{Omax}, V_I = 26 V			50		mV
t_{tr}	Load transient recovery time	I_O=0.1… 1.0 × I_{Omax}, V_I = 26 V load step = 0.5× I_{Omax}			100	150	µs
V_{tr}	Load transient voltage				+350		mV
					–500		mV
T_{coeff}	Temperature coefficient[2]	I_O=I_{Omax}, T_C <$T_{C\,max}$		see PKG 2611 Temperature characteristics			
t_r	Ramp-up time	I_O= 0.1…1.0 × I_{Omax}	0.1…0.9 × V_O		10	15	ms
t_s	Start-up time		From V_I connection to V_O= 0.9 × V_{Oi}		20		ms
I_O	Output current			0		12	A
$P_{O\,max}$	Max output power[3]	Calculated value			60		W
I_{lim}	Current limiting threshold	T_C < $T_{C\,max}$		12.1			A
I_{sc}	Short circuit current	V_O = 0.2… 0.5 V, T_A = 25°C			17		A
$V_{O\,ac}$	Output ripple & noise	I_O=I_{Omax}	20 Hz…5 MHz		60	100	mV_{p-p}
SVR	Supply voltage rejection (ac)	f = 100 Hz sine wave, 1 V_{p-p}, V_I = 26 V (SVR = 20 log (1 V_{p-p}/V_{Op-p}))		50			dB
OVP	Over voltage protection	I_O > 0.1 × I_{Omax}			6		V

[1] See Operating information.
[2] Temperature coefficient is positive at low temperatures and negative at high temperatures.
[3] See also Typical Characteristics, Power derating.

Miscellaneous

Characteristics		Conditions	min	typ	max	Unit
η	Efficiency	I_O= I_{Omax}, V_I = 26 V		83		%
P_d	Power dissipation	I_O= I_{Omax}, V_I = 26 V		12		W

PKG 2623 PI

T_C = –30…+90°C, V_I = 18…36 V unless otherwise specified. $I_{O1\ nom}$ = 2.5 A, $I_{O2\ nom}$ = 2.5 A.

Output

Characteristics		Conditions		Output 1 min	Output 1 typ	Output 1 max	Output 2 min	Output 2 typ	Output 2 max	Unit
V_{Oi}	Output voltage initial setting and accuracy	T_C = +25 °C, I_O = 2.5 A, V_I = 26 V		11.94	12.10	12.26	11.94	12.10	12.26	V
	Output adjust range[1]			8.50		13.20	8.50		13.20	V
V_O	Output voltage tolerance band	Long term drift included	I_O=0.1…1.0 × $I_{O\,nom}$ I_{O1}=I_{O2}	11.70		12.50	11.70		12.60	V
	Idling voltage	I_O = 0 A				12.95			20	V
	Line regulation	I_O=$I_{O\,nom}$	V_I = 19…36 V		10			10		mV
	Load regulation	I_{O1}=0.1…1.0 × $I_{O1\,nom}$, I_{O2}=$I_{O2\,nom}$, V_I = 26 V			10			30		mV
t_{tr}	Load transient recovery time	I_O=0.1…1.0 × $I_{O\,nom}$, V_I = 26 V load step = 0.5× $I_{O\,nom}$, I_{O1} = I_{O2}			100			100		µs
V_{tr}	Load transient voltage				+500			+500		mV
					–850			–850		mV
T_{coeff}	Temperature coefficient[2]	I_O=$I_{O\,nom}$, T_C <$T_{C\,max}$		see PKG 2623 Temperature characteristics						
t_r	Ramp-up time	I_O= 0.1…1.0 × $I_{O\,nom}$	0.1…0.9 × V_O		15			15		ms
t_s	Start-up time		From V_I connection to V_O= 0.9 × V_{Oi}		20			20		ms
I_O	Output current			0		4.0	0		4.0	A
$P_{O\,max}$	Max total output power[3]	Calculated value		60						W
I_{lim}	Current limiting threshold	T_C <$T_{C\,max}$		min 1.05 × $P_{O\,max}$[4]						
I_{sc}	Short circuit current	V_O = 0.2…0.5 V, T_A = 25 °C, R_{SC}>0.1Ω			6			6		A
$V_{O\,ac}$	Output ripple & noise	I_O=$I_{O\,nom}$	20 Hz…5 MHz		60	150		60	150	mV_{p-p}
SVR	Supply voltage rejection (ac)	f = 100 Hz sine wave, 1 V_{p-p}, V_I = 26 V (SVR = 20 log (1 V_{p-p}/V_{Op-p}))		45			45			dB
OVP	Over voltage protection	I_O> 0.1 × $I_{O\,max}$			15.5					V

1) See Operating information.
2) Temperature coefficient is positive at low temperatures and negative at high temperatures.
3) See also Typical Characteristics, Power derating.
4) I_{lim} on each output is set by the total load.

Miscellaneous

Characteristics		Conditions	min	typ	max	Unit
η	Efficiency	I_O= $I_{O\,max}$, V_I = 26 V		88		%
P_d	Power dissipation	I_O= $I_{O\,max}$, V_I = 26 V		8.2		W

PKG 2625 PI

T_C = –30…+90°C, V_I = 18…36 V unless otherwise specified. $I_{O1\ nom}$ = 2.0 A, $I_{O2\ nom}$ = 2.0 A.

Output

Characteristics		Conditions		Output 1 min	Output 1 typ	Output 1 max	Output 2 min	Output 2 typ	Output 2 max	Unit
V_{Oi}	Output voltage initial setting and accuracy	T_C = +25°C, I_O = 2.5 A, V_I = 26 V		14.85	15.00	15.15	14.80	15.00	15.20	V
	Output adjust range[1]			10.5		16.5	10.5		16.5	V
V_O	Output voltage tolerance band	Long term drift included	I_O=0.1…1.0 × $I_{O\,nom}$ I_{O1}=I_{O2}	14.20		15.65	14.20		16.10	V
	Idling voltage	I_O = 0 A				17			26	V
	Line regulation	I_O=I_{Onom}	V_I = 19…36 V		10					mV
	Load regulation	I_{O1}=0.1…1.0 × I_{O1nom}, I_{O2}=I_{O2nom}, V_I = 26 V			10					mV
t_{tr}	Load transient recovery time	I_O=0.1…1.0 × $I_{O\,nom}$, V_I = 26 V load step = 0.5× I_{Onom}, I_{O1} = I_{O2}			100			100		µs
V_{tr}	Load transient voltage				+600			+600		mV
					–600			–600		mV
T_{coeff}	Temperature coefficient[2]	I_O=$I_{O\,nom}$, T_C <$T_{C\,max}$		see PKG 2625 Temperature characteristics						
t_r	Ramp-up time	I_O= 0.1…1.0 × $I_{O\,nom}$	0.1…0.9 × V_O		5			5		ms
t_s	Start-up time		From V_I connection to V_O= 0.9 × V_{Oi}		13			13		ms
I_O	Output current			0		3.2	0		3.2	A
$P_{O\,max}$	Max total output power[3]	Calculated value			60					W
I_{lim}	Current limiting threshold	T_C <$T_{C\,max}$			min 1.05 × $P_{O\,max}$[4]					
I_{sc}	Short circuit current	V_O = 0.2…0.5 V, T_A = 25°C, R_{SC}>0.1Ω			4			4		A
$V_{O\,ac}$	Output ripple & noise	I_O=$I_{O\,nom}$	20 Hz…5 MHz		60	150		60	150	mV_{p-p}
SVR	Supply voltage rejection (ac)	f = 100 Hz sine wave, 1 V_{p-p}, V_I = 26 V (SVR = 20 log (1 V_{p-p}/V_{Op-p}))		45			45			dB
OVP	Over voltage protection	I_O> 0.1 × $I_{O\,max}$			18.5					V

1) See Operating information.
2) Temperature coefficient is positive at low temperatures and negative at high temperatures.
3) See also Typical Characteristics, Power derating.
4) I_{lim} on each output is set by the total load.

Miscellaneous

Characteristics		Conditions	min	typ	max	Unit
η	Efficiency	I_O= $I_{O\,max}$, V_I = 26 V		88		%
P_d	Power dissipation	I_O= $I_{O\,max}$, V_I = 26 V		8.2		W

Typical Characteristics

PKG 2410 PI

Efficiency (typ)

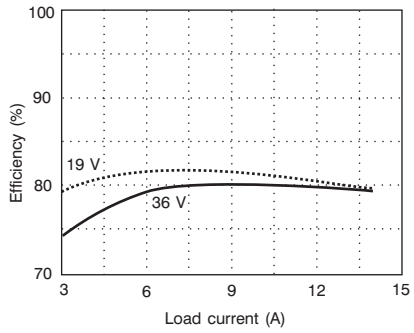

Output characteristic (typ)

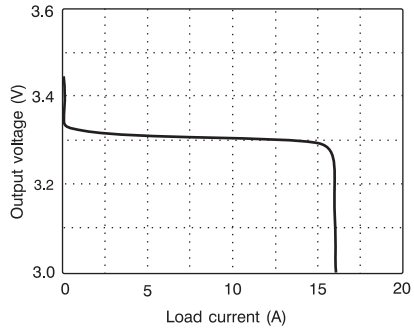

Power derating

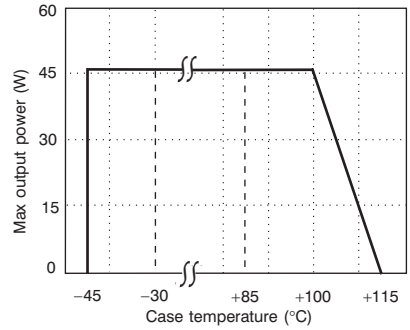

Temperature characteristics

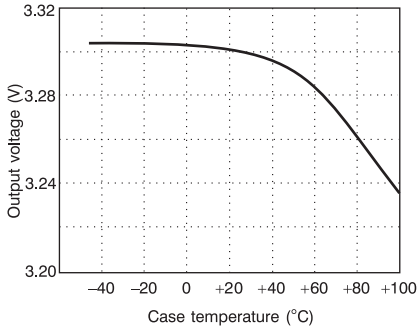

Dynamic load response (typ)

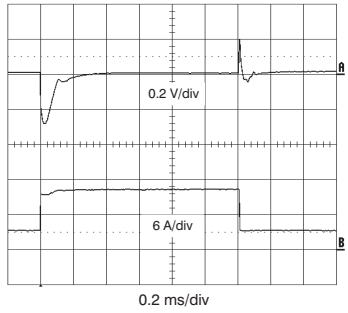

A. Maximum deviation $\Delta V_O < 0.1 \times V_{Oi}$
Recover time $t_r < 100\ \mu s$
The output voltage deviation is determined by the load transient (dI/dt)

B. Load change:
$0.25 \times I_{Onom} \ldots 0.75 \times I_O \ldots 0.25 \times I_{Onom}$
$I_{Onom} = I_{O1nom} + I_{O2nom}$
$dI/dt \approx 5A/\mu s$

PKG 2611 PI

Efficiency (typ)

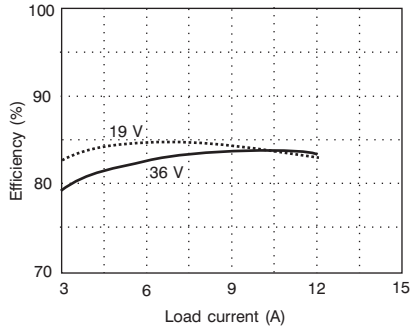

Output characteristic (typ)

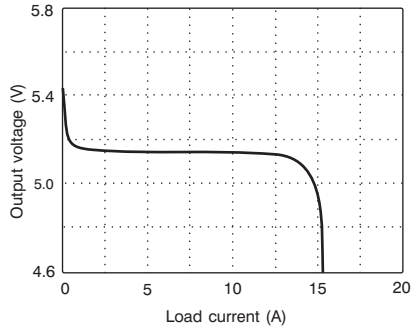

Power derating

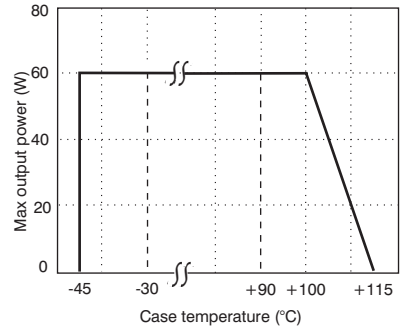

Temperature characteristics

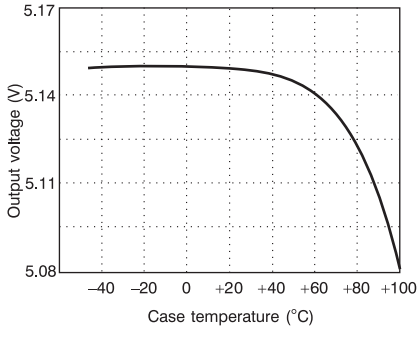

Dynamic load response (typ)

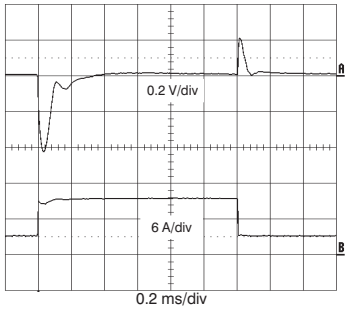

A. Maximum deviation $\Delta V_O < 0.1 \times V_{Oi}$
Recover time $t_r < 100\ \mu s$
The output voltage deviation is determined by the load transient (dI/dt)

B. Load change:
$0.25 \times I_{Onom} \ldots 0.75 \times I_O \ldots 0.25 \times I_{Onom}$
$I_{Onom} = I_{O1nom} + I_{O2nom}$
$dI/dt \approx 5A/\mu s$

PKG 2623 PI

Efficiency (typ)

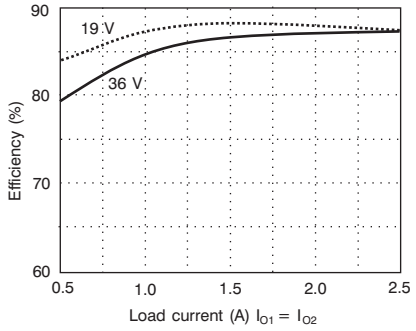

Output characteristic (typ)

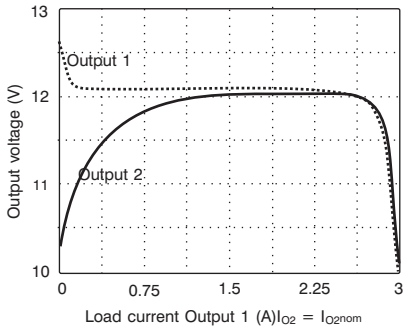

Power derating

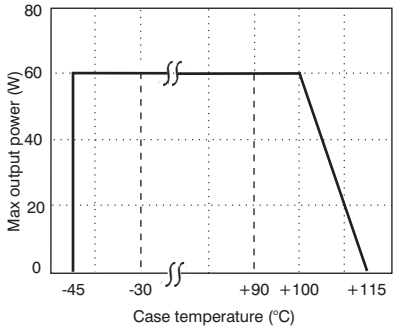

Temperature characteristics

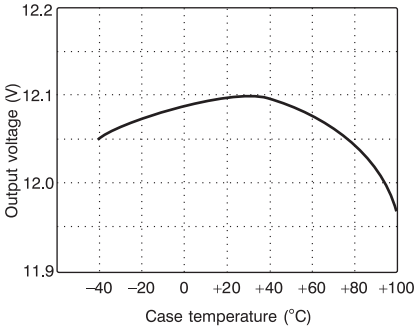

Dynamic load response (typ)[1)]

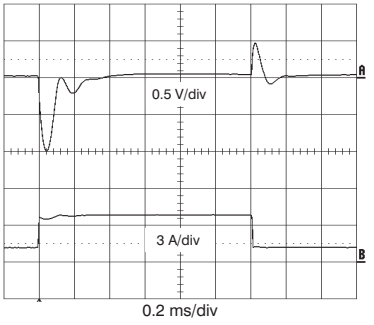

A. Maximum deviation $\Delta V_O < 0.1 \times V_{Oi}$
Recover time $t_r < 100$ µs
The output voltage deviation is determined by the load transient (dI/dt)

B. Load change:
$0.25 \times I_{Onom} \ldots 0.75 \times I_O \ldots 0.25 \times I_{Onom}$
$I_{Onom} = I_{O1nom} + I_{O2nom}$
$dI/dt \approx 5 A/\mu s$

1) Outputs paralleled.

PKG 2625 PI

Efficiency (typ)

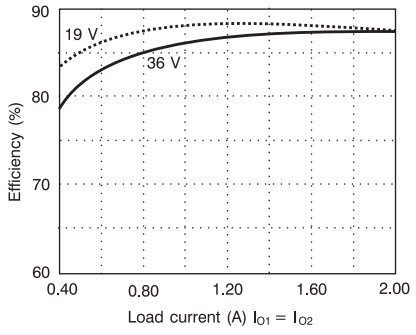

Output characteristic (typ)

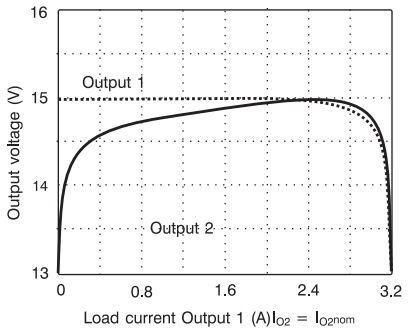

Power derating

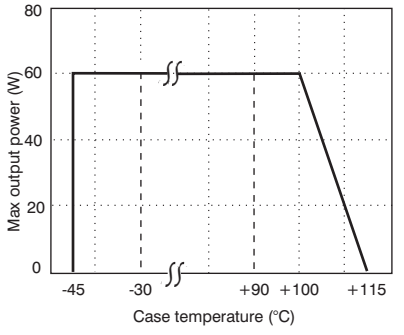

Temperature characteristics

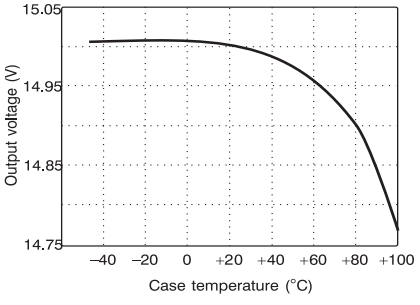

Dynamic load response (typ)[1)]

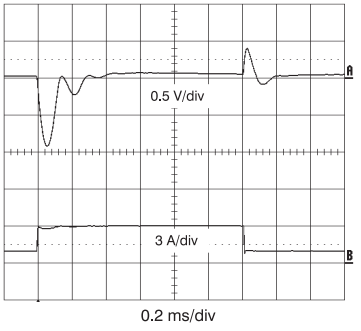

A. Maximum deviation $\Delta V_O < 0.1 \times V_{Oi}$
Recover time $t_r < 100$ µs
The output voltage deviation is determined by the load transient (dI/dt)

B. Load change:
$0.25 \times I_{Onom} \ldots 0.75 \times I_O \ldots 0.25 \times I_{Onom}$
$I_{Onom} = I_{O1nom} + I_{O2nom}$
$dI/dt \approx 5 A/\mu s$

1) Outputs paralleled.

EMC Specifications

The PKG DC/DC converter is mounted on a double sided printed circuit board (PB) with ground plane during EMC measurements.
The fundamental switching frequency is 510 kHz ±5% @ V_I = 26 V, I_O = (0.1...1.0) × $I_{O\ max}$.

Conducted EMI Input terminal value (typ)

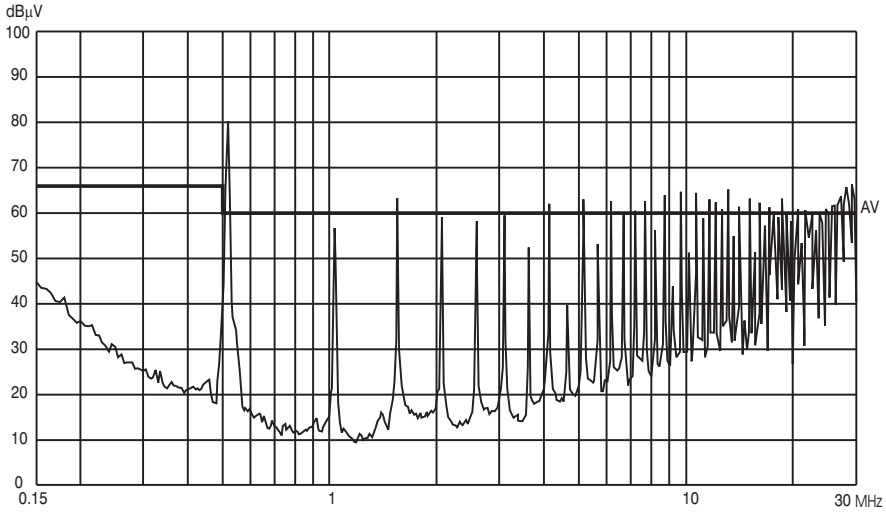

Test Set-up according to CISPR publ. 1A.

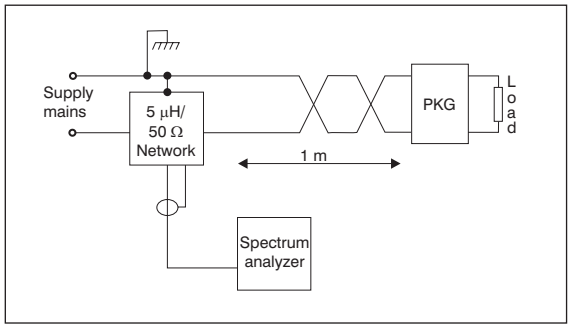

Radiated EMS
(Electro-Magnetic Fields)

Radiated EMS is measured according to test methods in IEC Standard publ. 801-3. No deviation outside the V_O tolerance band will occur under the following conditions:

Frequency range	Voltage level
0.01...200 MHz	3 V_{rms}/m
200...1,000 MHz	3 V_{rms}/m
1...12 GHz	10 V_{rms}/m

EFT

Electrical Fast Transients on the input terminals may cause output deviations outside what is tolerated by the electronic circuits, i.e. ±5%.
The PKG power module can withstand EFT levels of 0.5 kV keeping V_O within the tolerance band and 2.0 kV without destruction. Tested according to IEC publ. 801-4.

Output Ripple & Noise ($V_O$ac)

Output ripple is measured as the peak to peak voltage of the fundamental switching frequency.

Operating information

Remote Control(RC)

Remote turn-on and turn-off can be realized by using the RC-pin. Normal operation is achieved if pin 1 is open (NC). If pin 1 is connected to pin 3 the PKG DC/DC converter turns off. To ensure safe turn-off the voltage difference between pin 1 and 3 shall be less than 0.6 V. RC is TTL open collector compatible (see fig. 1).

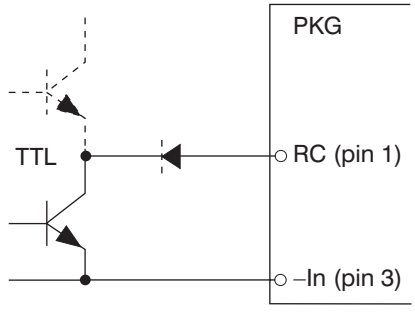

Fig. 1

Over Voltage Protection (OVP)

The PKG 2000I DC/DC converter series has an internal Over Voltage Protection circuitry (latching). The circuitry will detect over voltage conditions on the output and stop the converter operation. The recommended way to reset the OVP is by removing the input voltage. The OVP can not be triggered from the output (it can not be tested by applying high voltage on the output pins) and occurs only if the DC/DC converter has a real failure.

Turn-on/off InputVoltage(TOA)

The converter monitors the input voltage and will turn on and turn off at predetermined levels. The levels can be decreased by means of an external resistor connected between pin 2 and pin 4.
A 470 kΩ resistor will decrease the turn-off input voltage approximately 10%.

Output VoltageAdjust(V_{adj})

The utput voltage, V_O, can be adjusted by using an external resistor. A 0.1 MΩ resistor will change V_O approximately 5%. To decrease the output voltage the resistor should be connected between pin 10 and pin 9 (+Out 1). To increase the output voltage the resistor should be connected between pin 10 and pin 8 (–Out 1). For more information see AN 104 G.

Maximum CapacitiveLoad

The PKG series DC/DC converters has no limitation of maximum connected capacitance on the output. The power module may operate in current limiting mode during start-up, affecting the ramp-up and the start-up time. For optimum performance we recommend maximum 100 μF/A of I_O for dual outputs. Connect capacitors at the point of load for best performance.

Parallel Operation

The load regulation characteristic and temperature coefficient of the PKG DC/DC converters are designed to allow parallel operation. Paralleling of several modules is easily accomplished by connection of the output voltage terminal pins. The connections should be symmetrical, i.e. the resistance between the output terminal and the common connection point of each module should be equal. Good paralleling performance is achieved if you allow the resistance to be 10 mΩ.
10 mΩ equals 50 mm (2 in) of 35 μm (1 oz/ft2) copper with a trace width of 2.5 mm (0.1 in).
It is recommended not to exceed $P_O = n \times 0.8 \times P_{Omax}$, where P_{Omax} is the maximum power module output power and n the number of paralleled units, not to overload any of them and thereby decrease the reliability performance.
Paralleling performance may be further improved by voltage matching. Voltage matching is accomplished by using the Output Adjust function and trim the outputs to the same voltage.

Current LimitingProtection

The output power is limited at loads above the output current limiting threshold (I_{lim}), specified as a minimum value.

Input andOutputImpedance

Both the source impedance of the power feeding and the load impedance will interact with the impedance of the DC/DC converter. It is most important to have the ratio between L and C as low as possible, i.e. a low characteristic impedance, both at the input and output, as the power modules have a low energy storage capability. Use an electrolytic capacitor across the input or output if the source or load inductance is larger than 10 μH. Their equivalent series resistance together with the capacitance acts as a lossless damping filter. Suitable capacitor values are in the range 10–100 μF.

Delivery Package Information

PKG 2000I series standard delivery package is a 50 pcs box (One box contains 5 full trays).

Tray Specification

Material:	Polystyrene (PS)
Max surface resistance:	10 MOhm/sq
Color:	Black
Capacity:	10 pcs/tray
Loaded tray stacking pitch:	17 mm
Weight:	133 g

Quality

Reliability

Meantime between failure (MTBF) is calculated to >1.7 million hours at full output power and a case temperature of +75°C (T_A =+40 °C), using the Ericsson failure rate data system. The Ericsson failure rate data system is based on field failure rates and is continously updated. The data corresponds to actual failure rates of conponent used in Information Technology and Telecom equipment in temperature contledenvironments (TA =–5…+65°C). The data is considered to have a confidence level of 90%. For more information see Design Note 002.

Compatibility with RoHS requirements

TThe products are compatible with the relevant clauses and requirements of the RoHS directive 2002/95/EC and have a maximum concentration value of 0.1% by weight in homogeneous materials for lead, mercury, hexavalent chromium, PBB and PBDE and of 0.01% by weight in homogeneous materials for cadmium.

Exemptions in the RoHS directive utilized in the products:
- Lead in high melting temperature type solder (used to solder the die in semiconductor packages)
- Lead in glass of electronics components and in electronic ceramic parts (e.g. fill material in chip resistors)
- Lead as an alloying element in copper alloy containing up to 4% lead by weight (used in connection pins made of Brass)

Quality Statement

The products are designed and manufactured in an industrial environment where quality systems and methods like ISO 9000, 6σ and SPC, are intensively in use to boost the continuous improvements strategy. Infant mortality or early failures in the products are screened out by a burn-in procedure and an ATE-based final test. Conservative design rules, design reviews and product qualifications, as well as high competence of an engaged work force, contribute to the high quality of our products.

Warranty

Warranty period and conditions are defined in Ericsson Power Modules General Terms and Conditions of Sale.

Limitation of Liability

Ericsson Power Modules does not make any other warranties, expressed or implied including any warranty of merchantability or fitness for a particular purpose (including, but not limited to, use in life support applications, where malfunctions of product can cause injury to a person's health or life).

Product Program

V_I	V_O/I_O max		P_O max	Ordering No.
	Output 1	Output 2		
24 V	3.3 V/14 A[1)] 5 V/12 A 12 V/4 A 15 V/3.2 A	 12 V/4 A 15 V/3.2 A	46 W 60 W 60 W 60 W	PKG 2410 PI PKG 2611 PI PKG 2623 PI PKG 2625 PI

1) Adjustable to 2.5V

Information given in this data sheet is believed to be accurate and reliable.
No responsibility is assumed for the consequences of its use nor for any infringement of patents or other rights of third parties which may result from its use.
No license is granted by implication or otherwise under any patent or patent rights of Ericsson Power Modules. These products are sold only according to Ericsson Power Modules' general conditions of sale, unless otherwise confirmed in writing. Specifications subject to change without notice.

Ericsson Power Modules
SE-126 25 Stockholm, Sweden
Telephone: +46 8 568 69620

For local sales contacts, please refer to our website
www.ericsson.com/powermodules
or call: Int +46 8 568 69620, Fax: +46 8 568 69599

Americas
Ericsson Inc., Power Modules
+1-972-583-5224, +1-972-583-6910

Asia/Pacific
Ericsson Ltd.
+852-2590-2453

The latest and most complete information can be found on our website!

Datasheet

EN/LZT 146 03 R3A
© Ericsson Power Modules AB, April 2007