DC/DC converter
1.8 V/5 A/9 W Output
48 V Input

- SMD package with ultra low component height 8.0 mm (0.315 in.)
- 80% efficiency at full load
- 1,500 Vdc isolation voltage
- Synchronous rectification
- MTTF >10 million hours at +50°C case temperature (+40°C ambient)
- Low EMI

Patents Pending

The MacroDens™ PKF 4918 CSI true component level on-board DC/DC power modules are intended as distributed power sources in decentralized –48 and –60VDC power systems.
The over-moulded rugged design also makes them suitable for other demanding industrial applications. They are optimized for an operational ambient temperature range in compliance with present and future application needs, including non temperature controlled environments. The mechanical design offers a surface mount version, delivered in ready-to-use tubes, trays or tape & reel package, and compatibility with semi and fully aqueous cleaning processes.
For mechanical and other information please refer to the PKF series General information EN/LZT 146 57 R1A.

ERICSSON

Absolute Maximum Ratings

Characteristics		min	max	Unit
T_C	Case temperature at full output power	–45	+100	°C
T_S	Storage temperature	–55	+125	°C
V_I	Continuous input voltage[1)]	–0.5	+75	Vdc
V_{ISO}	Isolation voltage (input to output test voltage)	1,500		Vdc
V_{tr}	Transient input energy		0.10	Ws
V_{RC}	Remote control voltage pin 11 ref. to pin 17	–5	+15	Vdc
V_{adj}	Output adjust voltage pin 8 ref. to pin 17	–5	+40	Vdc

Stress in excess of Absolute Maximum Ratings may cause permanent damage. Absolute Maximum Ratings, sometimes referred to as no destruction limits, are normally tested with one parameter at a time exceeding the limits of Output data or Electrical Characteristics. If exposed to stress above these limits, function and performance may degrade in an unspecified manner.

Input $T_C < T_{Cmax}$ unless otherwise specified

Characteristics		Conditions	min	typ	max	Unit
V_I	Input voltage range[1)2)]		36		75	V
V_{Ioff}	Turn-off input voltage	See typical characteristics	30.0	33.5	35.0	V
V_{Ion}	Turn-on input voltage	See typical characteristics	32.0	34.5	36.0	V
C_I	Input capacitance			1.4		µF
P_{li}	Input idling power	$I_O = 0$, T_C=–30…+95°C	(V_I=53V) (V_I=66V)	550 700		mW
P_{RC}	Input stand-by power	T_C=–30…+95°C, RC connected to pin 17	(V_I=53V) (V_I=66V)	40 60		mW

NOTES:

1) The input voltage range 36…75 Vdc meets the European Telecom Standard prETS 300 132-2 Nominal input voltage range in 48 V and 60 Vdc power systems, –40.5…–57.0 V and –50.0…–72.0 V respectively. Absolute max continuous input voltage is 75 Vdc.

2) The power modules will operate down to ≤35V, when V_I decreases, but will turn on at V_I ≤36V, when V_I increases (see also Operating information).

Connections

Pin	Designation	Function
1	Out 1	Output 1*
2	Rtn	Output return.
3	Out 1	Output 1, Preferred output *. Positive voltage ref. to Rtn.
4-6	NC	Not connected. Isolated from each other.
7		Do not connect.
8	V_{adj}	Output voltage adjust.
9	NOR	Connection of Nominal Output voltage Resistor
10	TOA	Turn-on/off input voltage adjust.
11	RC	Remote control. Used to turn-on and turn-off output.
12–16	NC	Not connected. Isolated from each other.
17	–In	Negative input.
18	+In	Positive input.

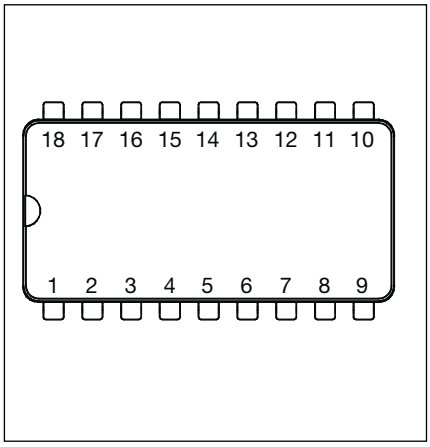

* Output pin 3 is preferred, for optimum performance use both pin 1 & 3.

Safety

The PKF 4918 CSI DC/DC power module is designed in accordance with EN 60 950, Safety of information technology equipment including electrical business equipment.
The PKF power modules are recognized by UL and meet the applicable requirements in UL 1950 Safety of information technology equipment, the applicable Canadian safety requirements and UL 1012 Standard for power supplies.
The DC/DC power module shall be installed in an end-use equipment and considerations should be given to measuring the case temperature to comply with T_{Cmax} when in operation. Abnormal component tests are conducted with the input protected by an external 15 A fuse. The need for repeating these tests in the end-use appliance shall be considered if installed in a circuit having higher rated devices.
When the supply to the DC/DC power module meets all the requirements for SELV (<60Vdc), the output is considered to remain within SELV limits (level 3). The isolation is an operational insulation in accordance with EN 60 950.
The DC/DC power module is intended to be supplied by isolated secondary circuitry and shall be installed in compliance with the requirements of the ultimate application. If they are connected to a 60 V DC system reinforced insulation must be provided in the power supply that isolates the input from the mains. Single fault testing in the power supply must be performed in combination with the DC/DC power module to demonstrate that the output meets the requirement for SELV. One pole of the input and one pole of the output is to be grounded or both are to be kept floating.
The terminal pins are only intended for connection to mating connectors of internal wiring inside the end-use equipment.
These DC/DC power modules may be used in telephone equipment in accordance with paragraph 34 A.1 of UL 1459 (Standard for Telephone Equipment, second edition).
The galvanic isolation is verified in an electric strength test. Test voltage (V_{ISO}) between input and output is 1,500 Vdc for 60 s. In production the test duration may be decreased to 1 s.
The capacitor between input and output has a value of 2,2 nF and the leakage current is less than 1µA @ 53 Vdc.
The case is designed in non-conductive epoxy. Its flammability rating meets UL 94V-0. The oxygen index is 34%.

Electrical Data

Fundamental circuit diagram

Single output

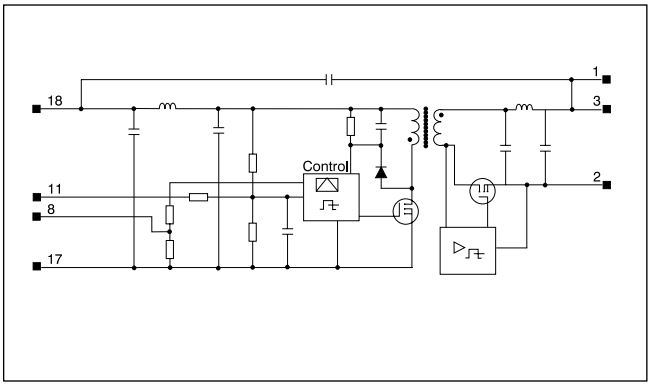

Transient input voltage

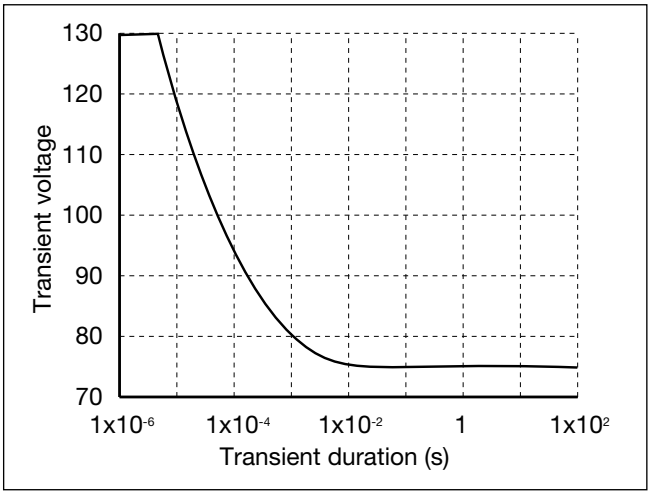

Single voltage pulse at +25°C ambient temperature.

Output

T_C = –30…+95 °C, V_I = 36 ...75 V, V_{Inom} = 53 V unless otherwise stated

Characteristics		Conditions		Output 1 min	Output 1 typ	Output 1 max	Unit
V_{Oi}	Output voltage initial setting and accuracy	T_C = +25°C, I_O = 3.5 A, V_{Inom}		1.77	1.80	1.84	V
	Output adjust range[1]			1.50	1.80	2.20	V
V_O	Output voltage tolerance band	Long term drift included	I_O = 0.5…5 A	1.71		1.89	V
			I_O = 0.5…3 A Pin 1	1.60		1.89	V
	Idling voltage	I_O = 0 A		1.69	1.81	1.91	V
	Line regulation	I_O = 5 A	V_I = 36…55 V		10		mV
			V_I = 55…75 V		–2.5		mV
	Load regulation	I_O = 0…5 A, V_{Inom}			25		mV
t_{tr}	Load transient recovery time	I_O = 0.5…5 A, V_{Inom} load step = 2.5 A			150		µs
V_{tr}	Load transient voltage				+300		mV
					–300		mV
T_{coeff}	Temperature coefficient[2]	I_O = 5 A, T_C = 40…+90 °C			–0.3		mV/°C
t_r	Ramp-up time	I_O = 0.3...5 A, 0.1…0.9 ×V_O, V_{Inom}			2		ms
t_s	Start-up time	I_O = 0.5…5 A, V_{Inom} From V_I connection to V_O = 0.9 ×V_{Oi}			5		ms
I_O	Output current [2]			0		5.0	A
P_{Omax}	Max output power[2]	Calculated value		9			W
I_{lim}	Current limiting threshold	T_C<T_{Cmax}, V_O = 1.4 V		5.5			A
I_{sc}	Short circuit current	V_O = 0.2…0.5V, T_C = +25°C			7		A
V_{Oac}	Output ripple & noise	I_O = 3 A	20 Hz…5 MHz			50	mV_{p-p}
		I_O = 5 A	20 Hz…5 MHz			75	mV_{p-p}
			0.4…50 MHz			80	dBµV
SVR	Supply voltage rejection (ac)	f = 100 Hz sine wave, 1V_{p-p}, V_{Inom} (SVR = 20 log (1 V_{p-p}/V_{Op-p}))		50			dB

[1] See also Operating Information
[2] See Typical Characteristics

Miscellaneous

Characteristics		Conditions		min	typ	max	Unit
η	Efficiency	I_O = 5 A	V_I = 53 V	75	80		%
			V_I = 66 V	75	79		%
P_d	Power dissipation		V_I = 53 V		2.3	3.0	W
			V_I = 66 V		2.4	3.0	W

EN/LZT 146 024 R1A ©Ericsson Power Modules AB, March 2003

Typical Characteristics

Efficiency (typ) @ T_A = +25°C

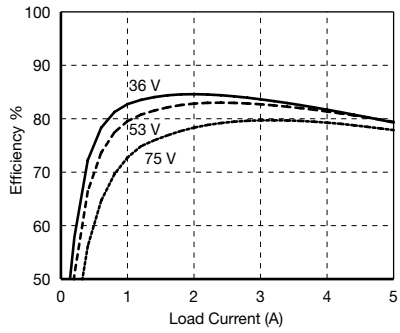

Power derating

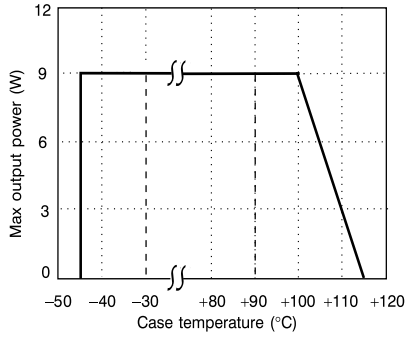

Output characteristic (typ)

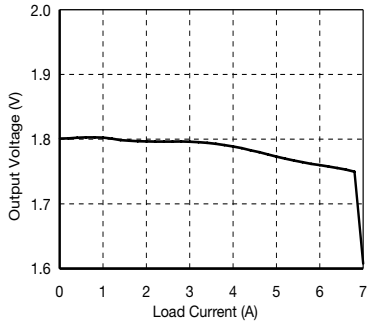

Temperature coefficient

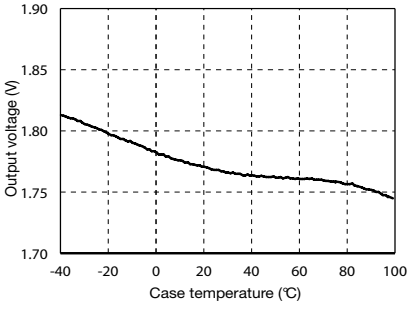

Turn-on/turn-off input voltage

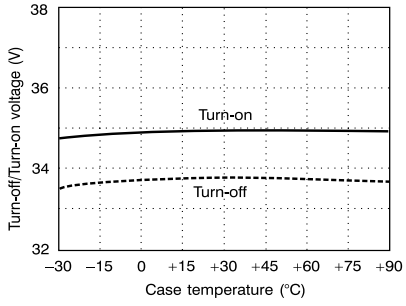

Dynamic load response (typ) @ +25°C

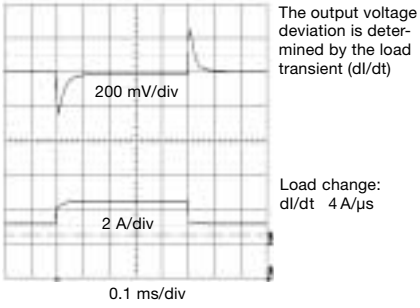

Current derating

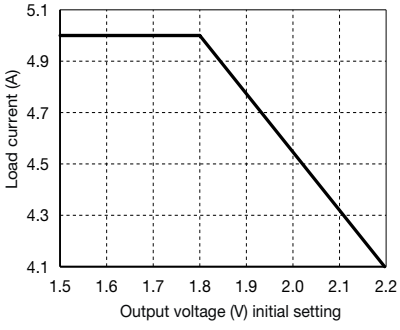

EMC Specifications

The PKF power module is measured directly.
The fundamental switching frequency is 305 kHz ±5% @
$I_O = (0.1 \ldots 1.0) \times I_O^{max.}$

Conducted EMI (input teminals)

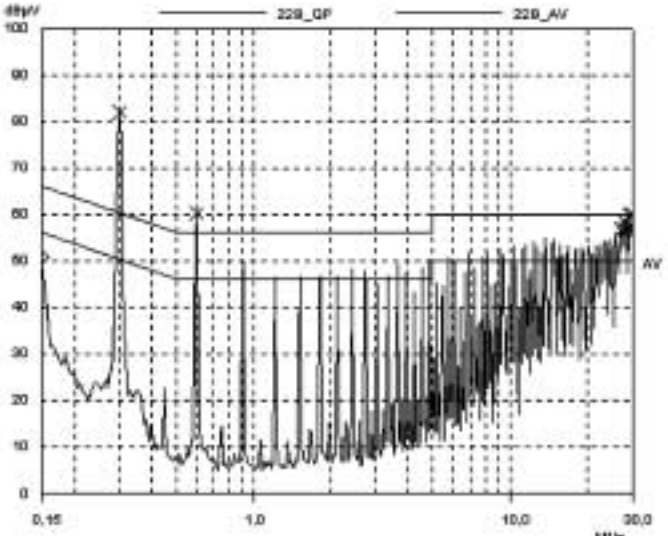

PKF 4918B without filter

External Filter (class B)

Required external input filter in order to meet class B in EN 55022, CISPR 22 and FCC part 15J.

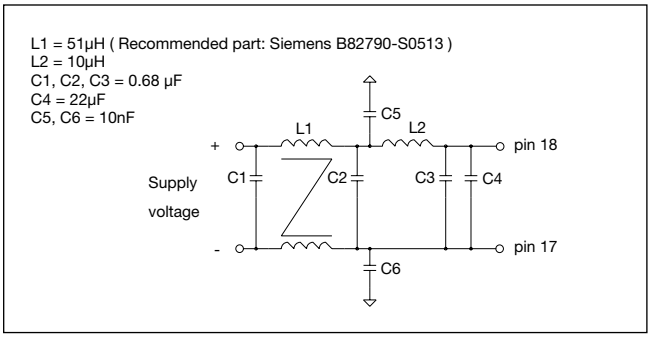

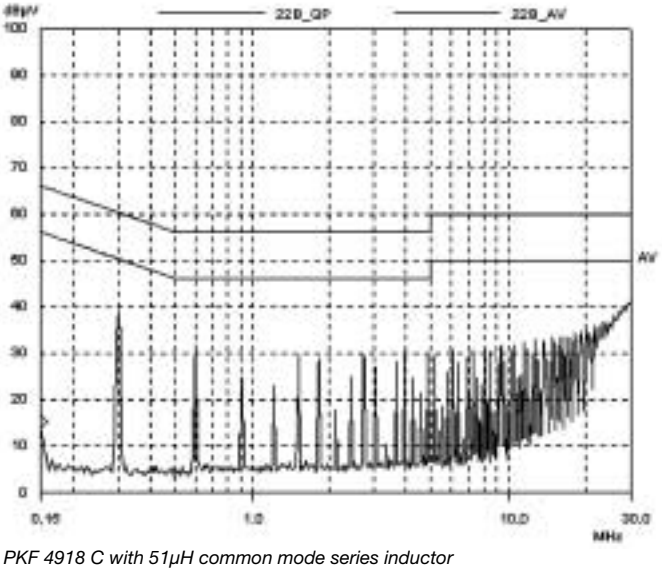

PKF 4918 C with 51µH common mode series inductor

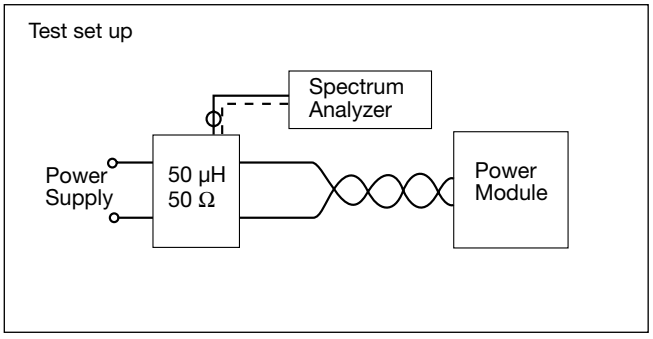

Radiated EMS (Electro-Magnetic Fields)

Radiated EMS is measured according to test methods in IEC Standard publ. 801-3. No deviation outside the V_O tolerance band will occur under the following conditions:

Frequency range	Voltage level
0.01...200 MHz	3 V_{rms}/m
200...1,000 MHz	3 V_{rms}/m
1...12 GHz	10 V_{rms}/m

Conducted EMS

Electro Magnetic Susceptibility is measured by injection of electrical disturbances on the input terminals. No deviation outside the V_O tolerance band will occur under the following conditions:

Frequency range	Voltage level
30...300 MHz	1.0 V_{rms}

The signal is amplitude modulated with 1 kHz/80% and applied in both differential and common mode.

ESD

Electro Static Discharge is tested according to IEC publ. 801-2. No destruction will occur if the following voltage levels are applied to any of the terminal pins:

Test	Voltage level
Air discharge	±4 kV
Contact discharge	±2 kV

EFT

Electrical Fast Transients on the input terminals could affect the output voltage regulation causing functional errors on the Printed Board Assembly (PBA). The PKF power modules withstand EFT levels of 0.5 kV keeping V_O within the tolerance band and 2.0 kV without destruction. Tested according to IEC publ. 801-4.

Output Ripple & Noise ($V_O$ac)

Output ripple is measured as the peak to peak voltage of the fundamental switching frequency.

EN/LZT 146 024 R1A ©Ericsson Power Modules AB, March 2003

Operating Information

Remote Control (RC)

Turn-on or turn-off can be realized by using the RC-pin. If pin 11 is connected to pin 17 the power module turns off. Normal operation is achieved if pin 11 is open (NC). To ensure safe turn-off the voltage difference between pin 11 and 17 shall be less than 1.0V. The pin is to be connected to an open collector output with a sink capacity of >300 µA (see fig. 1).

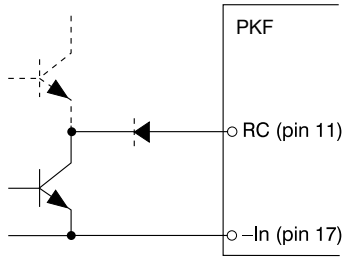

Figure 1

Turn-on/off Input Voltage

The power module monitors the input voltage and will turn on and turn off at predetermined levels. These levels can be adjusted by means of external resistors.

To increase V_{Ion} a resistor should be connected between pin 11 and 17 (see fig.2).

The resistance is given by the following equation (For V_{Ion}>34.5V):

$R_{Ion} = (2655 - V_{Ion})/(V_{Ion} - 34.5)$ kΩ

V_{Ioff} is the adjusted turn-off input voltage and is determined by $V_{Ion} - V_{Ioff} = 2$ V (typical value).

To decrease V_{Ion} a resistor should be connected between pin 10 and 11 (see fig. 2). The resistance is given by the following equation (for 30.5V < V_{Ion} > 34.5V):

$R_{Ion} = 45 \times (V_{Ion} - 30.5)/(34.5 - V_{Ion})$ kΩ

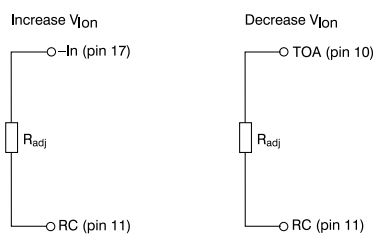

Figure 2

Output Voltage Adjust (Vadj)

Output voltage, V_O, can be adjusted by using an external resistor or other external circuitry. If other circuitry is used, the slew rate has to be limited to maximum 5 V/ms. If pins 8 and 9 are not connected together the output will decrease to a low value. To increase V_O a resistor should be connected between pin 8/9 and 17, and to decrease V_O a resistor should be connected between pin 8 and 9 (see fig. 4).

Typical required resistor value to increase V_O is given by:

$R_{adj} = 5 \times (2.25 - V_O)/(V_O - V_{Oi})$ kΩ

where V_O is the desired output voltage,
V_{Oi} is the typical output voltage initial setting

Typical required resistor value to decrease V_O is given by:

$R_{adj} = 19 \times (V_{Oi} - V_O)/(V_O - 1.477)$ kΩ

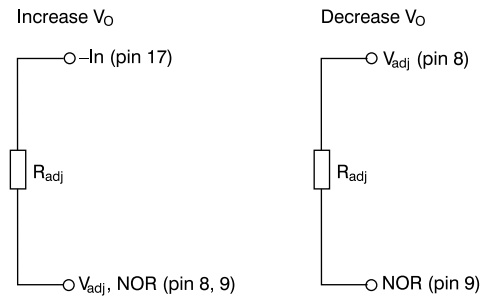

Figure 3

Parallel Operation

Contact Ericsson for more information.

Information given in this data sheet is believed to be accurate and reliable. No responsibility is assumed for the consequences of its use nor for any infringement of patents or other rights of third parties which may result from its use.
No license is granted by implication or otherwise under any patent or patent rights of Ericsson Power Modules. These products are sold only according to Ericsson Power Modules' general conditions of sale, unless otherwise confirmed in writing.
Specifications subject to change without notice.

Ericsson Power Modules
SE-141 75 Kungens Kurva, Sweden
Telephone: +46 8 568 69620

For local sales contacts, please refer to our website
www.ericsson.com/powermodules
or call: Int +46 8 568 69620, Fax: +46 8 568 69599

Americas
Ericsson Inc., Power Modules
+1-877-374-2642

Asia/Pacific
Ericsson Ltd.
+852-2590-7152

The latest and most complete information can be found on our website!

Preliminary Data Sheet

EN/LZT 146 024 R1A
© Ericsson Power Modules AB, March 2003