ERICSSON

OUTPUT OVER VOLTAGE PROTECTION WITH LATCHING FUNCTION

DESIGN NOTE 012

Ericsson Power Modules

ericsson.com

OUTPUT OVER VOLTAGE PROTECTION WITH LATCHING FUNCTION

The following example shows how to use the Remote Control (RC) pin of an Ericsson DC/DC power module to stop the operation when there is an over voltage condition. The circuit is latching and power needs to be cycled off/ on to reset.

When designing an over-voltage protection circuit it is important to consider the desired function. If the main concern is rapid transients it is important to select a fast acting optocoupler. On the other hand, with over-voltages of longer duration you need to select a slower optocoupler in order to avoid triggering on the fast transients or asymmetrical disturbances.

$$V_{trip} = 2.495 \times \frac{(R1 + R2)}{R2}$$

Component values for a 5 V output with the voltage limit set to 6.25V and 36-72 Vdc input:

R1	15 kΩ
R2	10 kΩ
R3, R4	1 kΩ
R5	270 Ω
R6, R10	100 kΩ
R7, R8	4.7 Ω
R9	27 µF
Q1, Q2	2N5401 or similar
Q3, Q4	2N5551 or similar

D1 reference diode is TL 431 or similar
Optocoupler is Toshiba TLP or similar

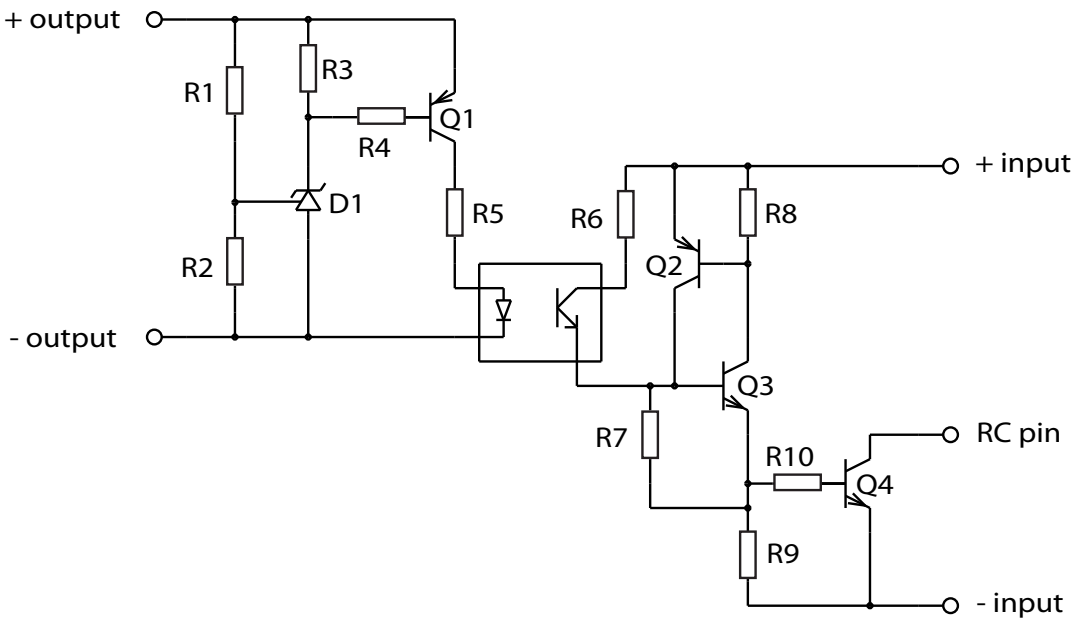

Ericsson is shaping the future of Mobile and Broadband Internet communications through its continuous technology leadership.

Providing innovative solutions in more than 140 countries, Ericsson is helping to create the most powerful communication companies in the world.

Formed in the late seventies, Ericsson Power Modules is a division of Ericsson AB that primarily designs and manufactures isolated DC/DC converters and non-isolated voltage regulators such as point-of-load units ranging in output power from 1 W to 700 W. The products are aimed at (but not limited to) the new generation of ICT (information and communication technology) equipment where systems' architects are designing boards for optimized control and reduced power consumption.

Power Modules – Americas
Telephone: +1-972-583-5254
+1-972-583-6910

Power Modules – Asia/Pacific
Telephone: +852-2590-2453

Ericsson AB, Power Modules
SE-164 80 Stockholm, Sweden
Telephone +46 10 716 9620

The content of this document is subject to revision without notice due to continued progress in methodology, design and manufacturing. Ericsson shall have no liability for any error or damage of any kind resulting from the use of this document

Ericsson AB, Power Modules
SE-164 80 Stockholm, Sweden
Telephone +46 10 716 9620
www.ericsson.com/powermodules

DESIGN NOTE
EN/LZT 146 02 R2A
© Ericsson AB June 2010